JOB: 67510

ASSY: 67510

ORG. DWG.

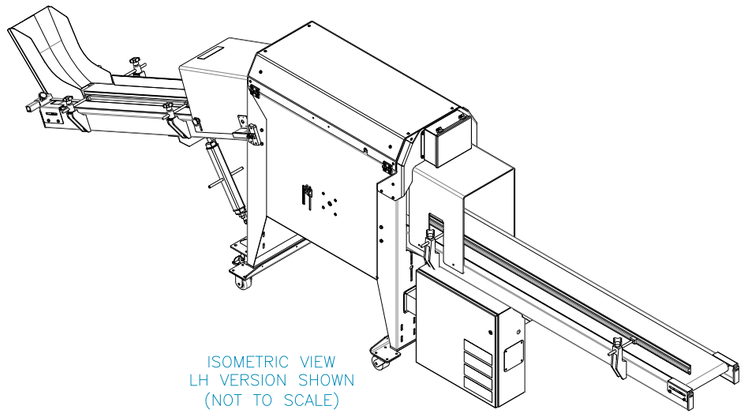

ISOMETRIC VIEW
LH VERSION SHOWN
(NOT TO SCALE)

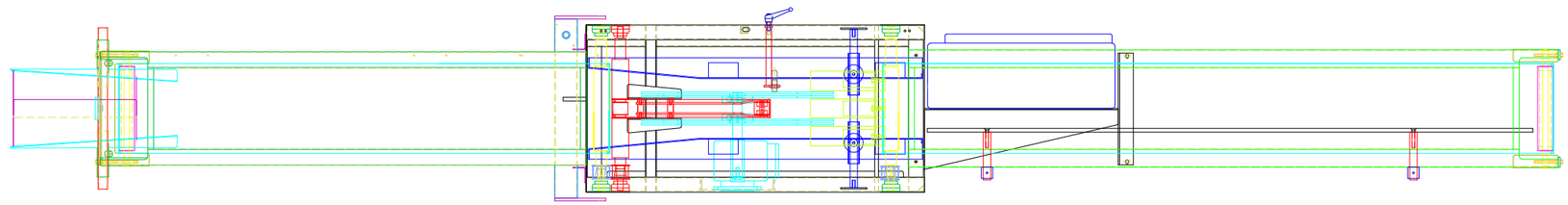

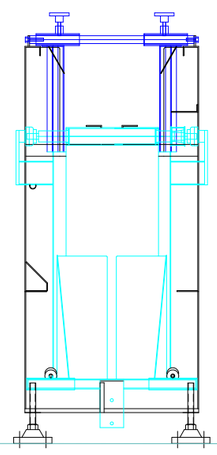

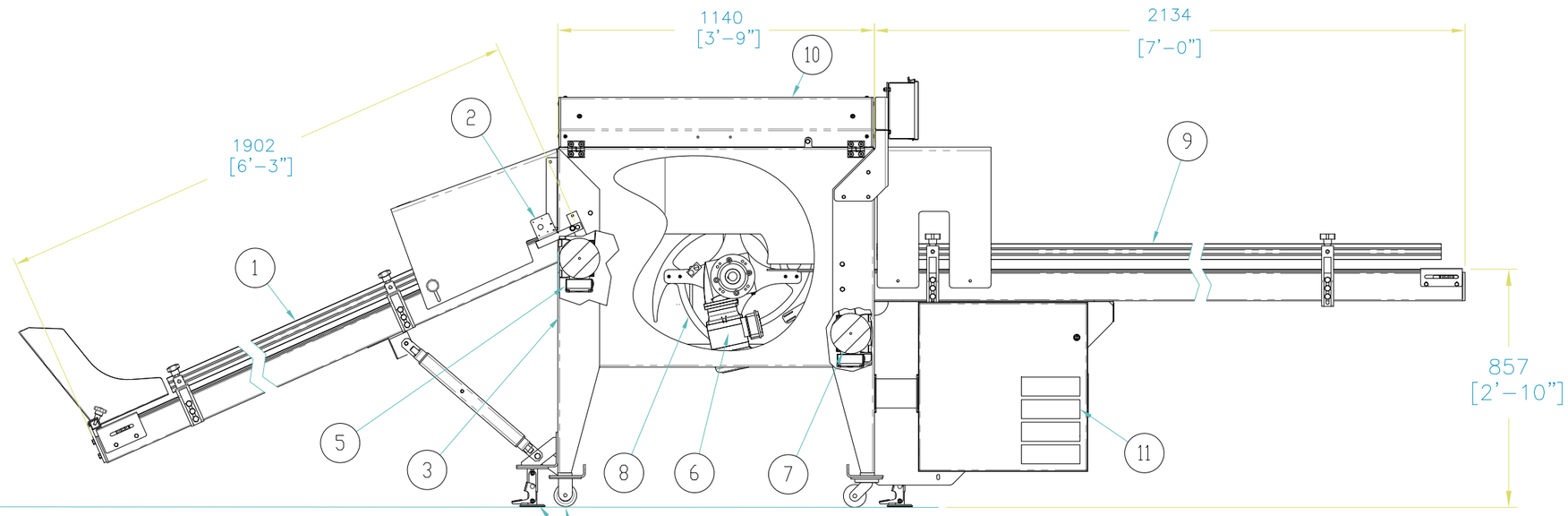

4x MACHINE FEET (STANDARD)
4x CASTERS (OPTIONAL)

B

ITEM NO.	PART NO.	DESCRIPTION	QTY.
11	2401-958	COLLATOR SAFETY LABELS	1
10	2403-447	KIT, GUARDS	1
9	2143-991-02	EXIT CONVEYOR (7'-0")	1
8	2144-270-01	COLLATOR WHEEL, SMALL	1
7	104-495	NORD MOTOR SK 172.1-63 LA/4 CUS 96 RPM	1
6	104-494	NORD MOTOR SK2SM63AZB-71L/4 72 RPM	1
5	104-498	NORD MOTOR SK 172.1-71 L/4 CUS 243 RPM	1
4	100-001	FOOT VG52002S34L7 3/4-10 X 7.69 S/S	4
3	2148-089	STD COLLATOR IMPERIAL W/ HMI KIT RH	1
2	318-451	BRACKET, PHOTOCELL	1
1	2145-110-02	INFEED CONV. 6'-3"	1

C

REVBLK-B

REV	CHANGE	DATE	BY
G			
F			
E			
D			
C	2403-477 WAS 4000-004	29.JAN.2018	K. Hildebrandt
B	UPdated Caster Kit	22.MAY.2017	C. Banks
A			

TBREVC

REMOVE ALL BURRS & SHARP EDGES

TOLERANCES (NOT OTHERWISE SPECIFIED)

DECIMAL DIMENSION XXX.X ±.5mm
XXX ± 1mm

FRACTIONAL DIMENSIONS X/X ± 1/64

ANGLE ± 1°

SURFACES ROUGHNESS

ALL MACHINED SURFACES TO MICROINCHES (MIN.) UNLESS OTHERWISE SPECIFIED 250

DIMENSIONS ARE EXPRESSED IN MILLIMETERS UNLESS DENOTED (*)

DRAWING BY TED DATE 17.MAY.2019

CHECKED BY TED DATE 17.MAY.2017

COLLATOR 200

67510

SCALE NTS

PROJECTION

BLUEPRINT AUTOMATION

RICHMOND, VIRGINIA USA

MATERIAL UNS S30400

SHEET 1 OF 1

DRAWING REMAINS PROPERTY OF BLUEPRINT AUTOMATION ALL RIGHTS RESERVED

MFG INFO	
JOB:	067510-1-1
ASSY:	2145-110-02
QTY:	2
PART NO:	2145-110-02
COLOR:	Stainless Steel

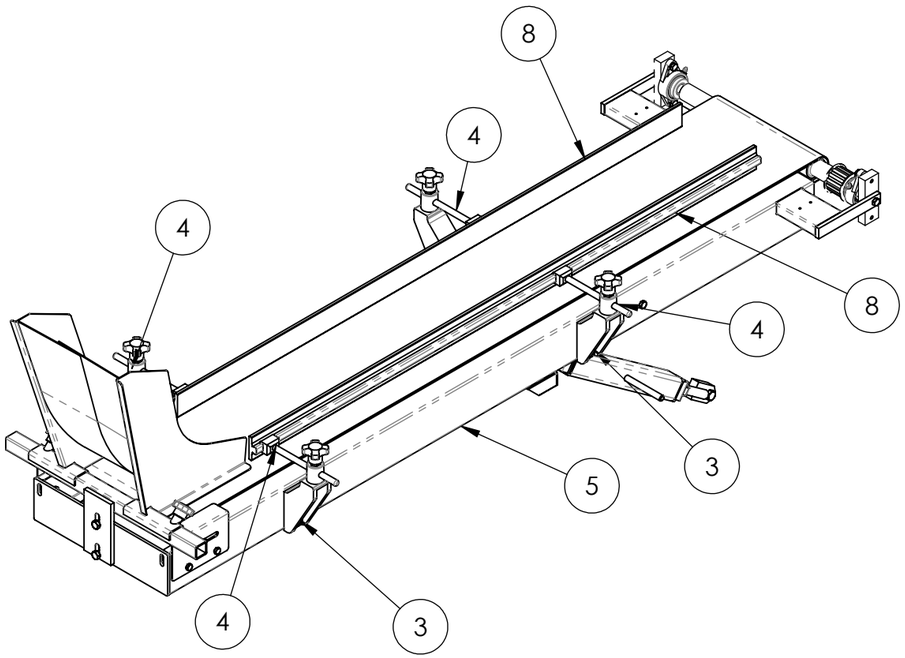

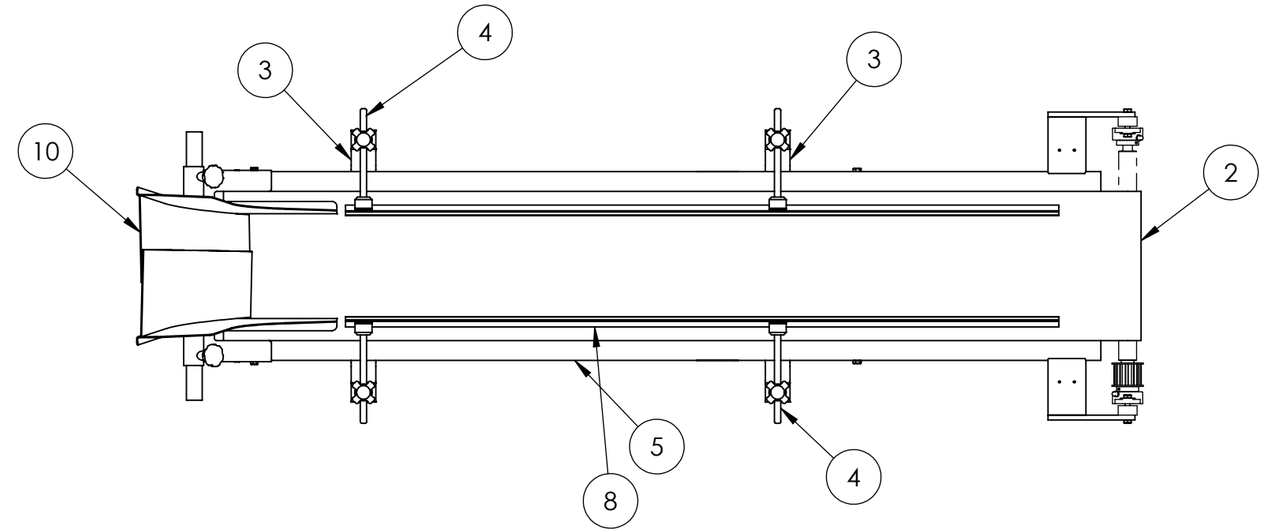

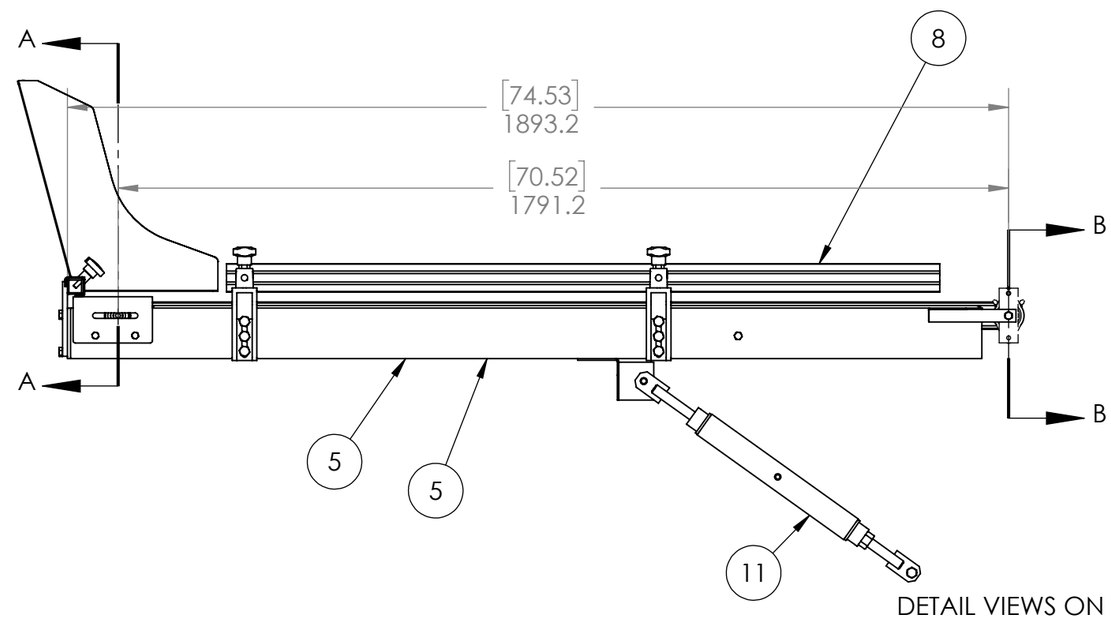

DETAIL VIEWS ON SHEET 2

ITEM NO.	PART NO.	DESCRIPTION	2145-110-02/QTY.
11	210-193	TURNBUCKLE ASSEMBLY	1
10	2014-120	CHUTE ASSEMBLY	1
9	3108-124	PINCH GUARD	1
8	3143-041-11	SIDE RAIL - 56"	2
7	3107-947	IDLER ROLLER	1
6	3126-802	IDLER SHAFT	1
5	3143-092-02	PAN WLDMT, INFEED 6'-3"	1
4	109-623	RAIL CLAMP & MOUNTING BAR VG0311270	4
3	101-252	BRACKET, SWIVEL VG203LTC12	4
2	1028-554-06	BELT 2AR36-0BG-RT 300MM X 3742MM	1
1	100-455	BEARING 3/4 BORE	2

REV.	VER.	DESCRIPTION	DATE	ENGINEER

REVISIONS

TOLERANCES UNLESS OTHERWISE NOTED

.X---	±0.1	ANGLES:	±0.5°
.XX---	±0.01		
.XXX--	±0.005	FINISHES:	125
.XXXX-	±0.0005		

	DATE:	NAME:
ENGINEER:	02/19/2015	Katie.Hildebrandt
CHECKED:		

BluePrint Automation
Oostzee 26 3446CH Woerden; tel. 0348-410999
16037 Innovation Drive, Colonial Heights, VA 23834; tel 804-520-5400
1801 Iron Horse Drive, Suite B; Longmont, CO 80501; tel. 303-682-1200

MATERIAL:

PROJECTION:

REMARKS: ALL UNITS IN MM UNLESS OTHERWISE SPECIFIED

DESCRIPTION:
INFEED CONV. 6'-3"
REF 202-006

SCALE: 1:12

SHEET: A3

DRAWING NUMBER: **2145-110-02**

REVISION: A

PAGE: 1 OF: 2

WEIGHT: 54564.02 g

© 2005 Drawing remains property of BluePrint Automation, Inc., All rights reserved

MFG INFO	
JOB:	067510-1-1
ASSY:	2145-110-02
QTY:	2
PART NO:	2145-110-02
COLOR:	Stainless Steel

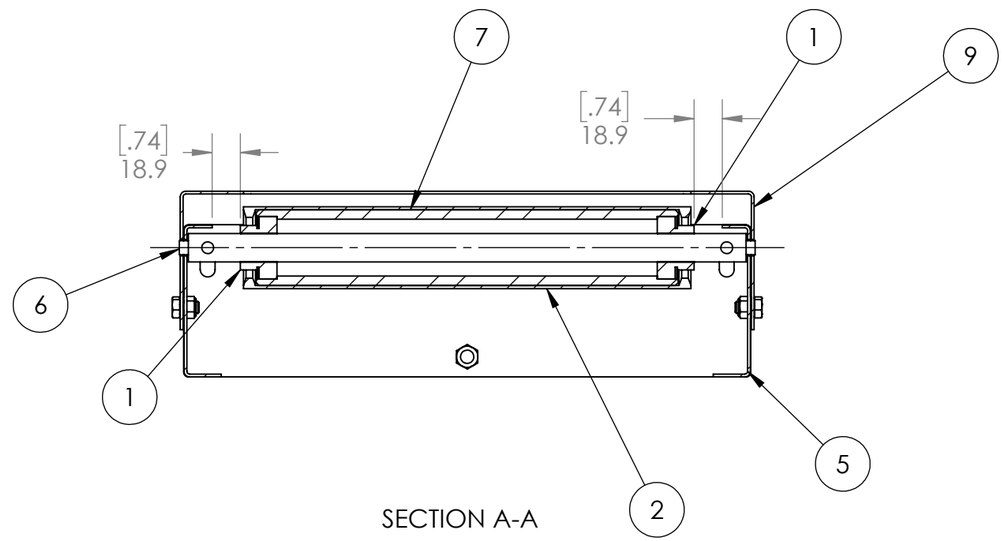

SECTION A-A

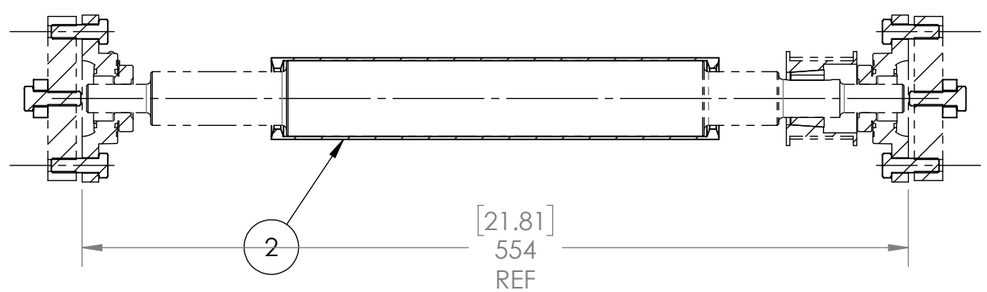

REV.	VER.	DESCRIPTION	DATE	ENGINEER

REVISIONS

TOLERANCES UNLESS OTHERWISE NOTED

.X----	±0.1	ANGLES:	±0.5°
.XX---	±0.01		
.XXX--	±0.005	FINISHES:	125
.XXXX-	±0.0005		

	DATE:	NAME:
ENGINEER:	02/19/2015	Katie.Hildebrandt
CHECKED:		

BluePrint Automation

Oostzee 26 3446CH Woerden; tel. 0348-410999
16037 Innovation Drive, Colonial Heights, VA 23834; tel 804-520-5400
1801 Iron Horse Drive, Suite B; Longmont, CO 80501; tel. 303-682-1200

MATERIAL:

REMARKS: ALL UNITS IN MM UNLESS OTHERWISE SPECIFIED

PROJECTION:

DESCRIPTION:

INFEED CONV. 6'-3"
REF 202-006

SCALE: 1:4

SHEET: A3

DRAWING NUMBER: **2145-110-02**

REVISION: A

PAGE: 2 OF: 2

WEIGHT: 54564.02 g

© 2005 Drawing remains property of BluePrint Automation, Inc., All rights reserved

MFG INFO	
JOB:	067510-1-1
ASSY:	2145-110-02
QTY:	2
PART NO:	2014-120
COLOR:	Stainless Steel

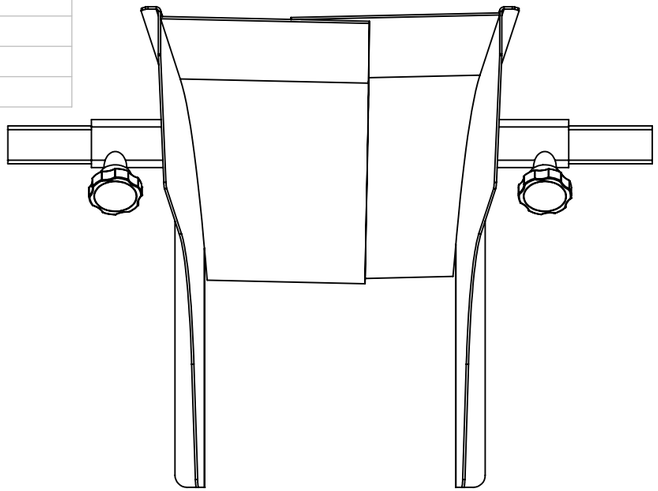

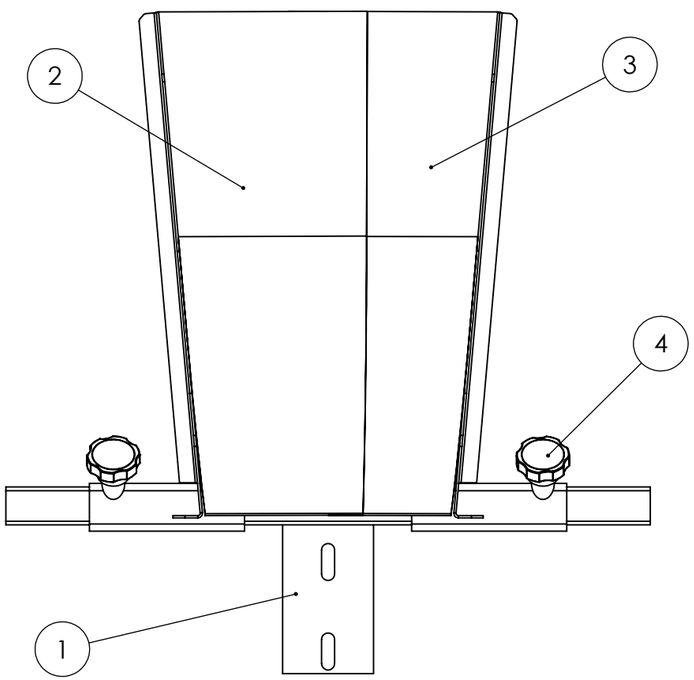

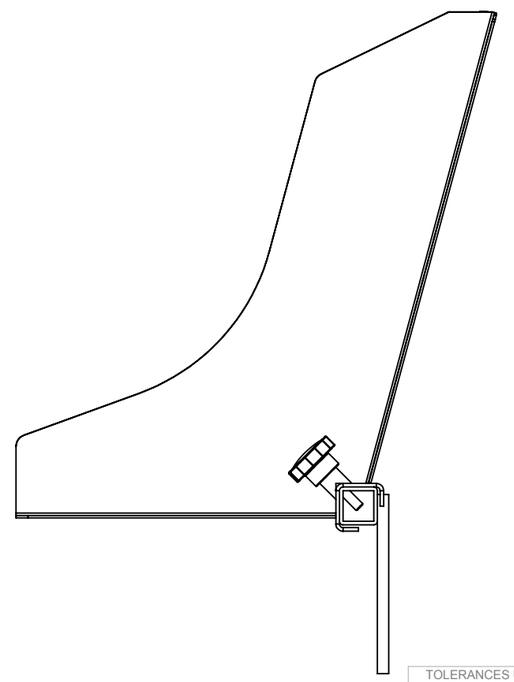

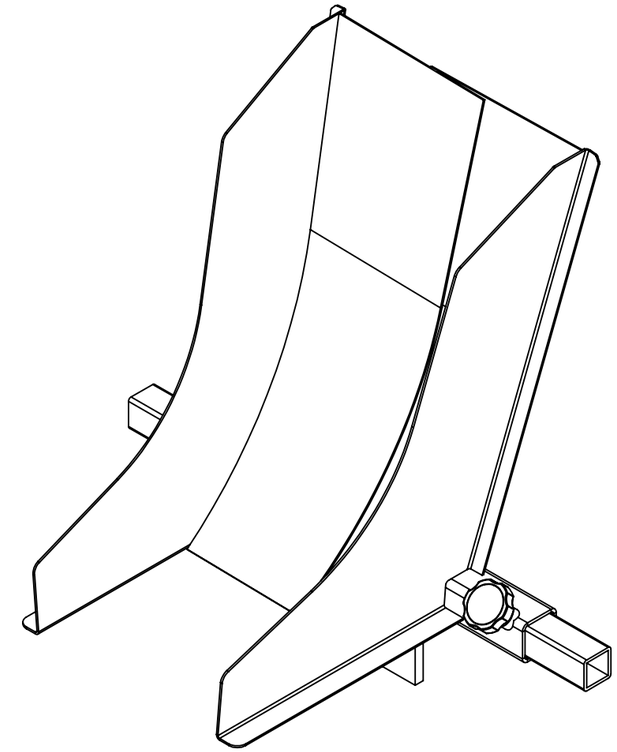

ITEM NO.	PART NO.	DESCRIPTION	QTY.
4	102-497	vlm stock KNOB DK27	2
3	3101-894	RH CHUTE WELDMENT (IMPERIAL)	1
2	3101-891	LH CHITE WELDMENT (METRIC)	1
1	3107-920	PRODUCT CHUTE RAIL	1

REV.	VER.	DESCRIPTION	DATE	ENGINEER
B			05/07/2013	Anthony Dosier

REVISIONS

TOLERANCES UNLESS OTHERWISE NOTED

.X----	±0.1	ANGLES:	±0.5°
.XX---	±0.01		
.XXX--	±0.005	FINISHES:	125
.XXXX-	±0.0005		

	DATE:	NAME:
ENGINEER:	2010-08-12	Ben Maddock
CHECKED:		

BluePrint Automation

Oostzee 26 3446CH Woerden; tel. 0348-410999
16037 Innovation Drive, Colonial Heights, VA 23834; tel 804-520-5400

MATERIAL:

REMARKS: ALL UNITS IN MM UNLESS OTHERWISE SPECIFIED

PROJECTION:

DESCRIPTION: CHUTE ASSEMBLY (IMPERIAL)

SCALE: 1:5

SHEET: A3

DRAWING NUMBER: **2014-120**

REVISION: B

PAGE: 1 OF: 1

WEIGHT: 7774.13 g

© 2005 Drawing remains property of BluePrint Automation, Inc., All rights reserved

MFG INFO	
JOB:	067510-1-1
ASSY:	2145-110-02
QTY:	2
PART NO:	210-193
COLOR:	Stainless Steel

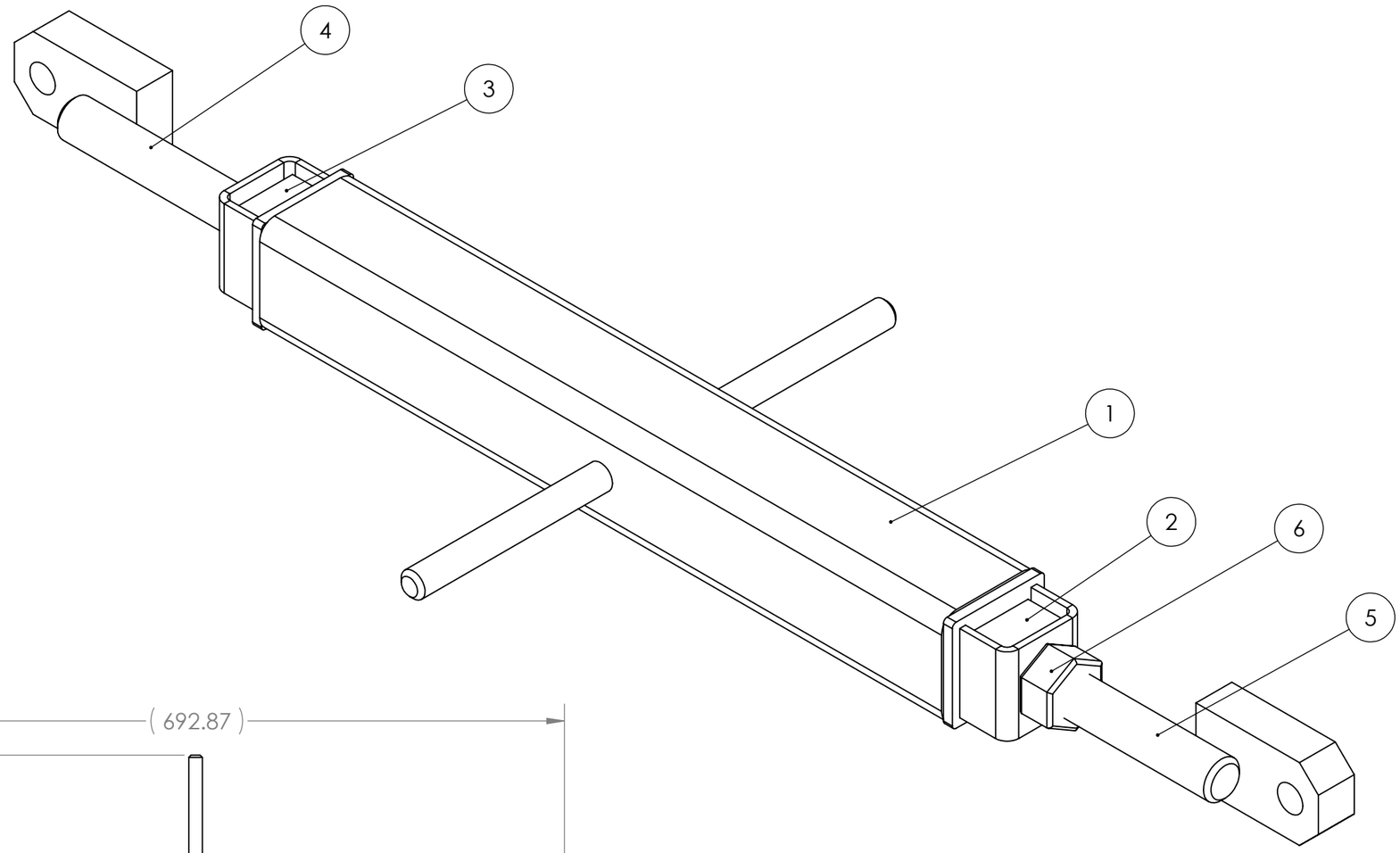

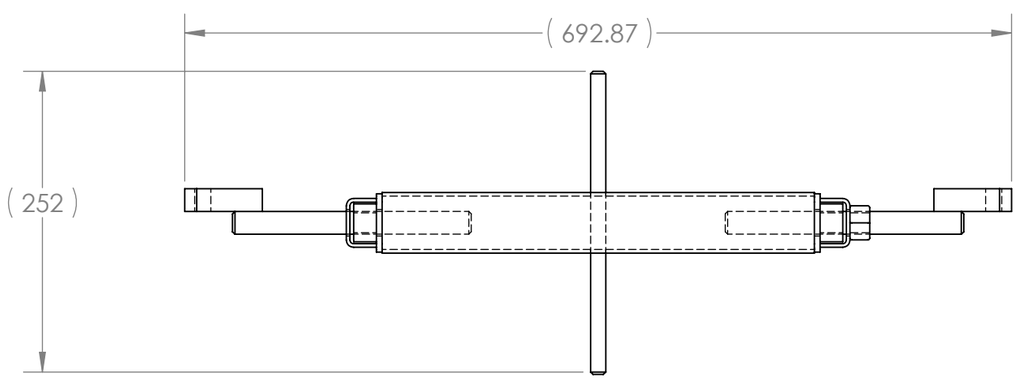

ITEM NO.	PART NO.	DESCRIPTION	QTY.
6	111-128	NUT, HEX, 3/4" X 6, FASTENAL 12083-00233	1
5	356-490	TURNBUCKEL ACME ROD WELDMENT RH	1
4	356-486	TURNBUCKEL ACME ROD WELDMENT LH	1
3	112-131	ACME SQUARE NUT 95270A527	1
2	112-130	ACME SQUARE NUT 'FASTENAL' 12083-00234	1
1	356-495	TURNBUCKEL TUBE WELDMENT	1

REV.	VER.	DESCRIPTION	DATE	ENGINEER
B		UPDATED MATES	16/08/10	nathan smith

REVISIONS

TOLERANCES UNLESS OTHERWISE NOTED
.X---- ±
.XX--- ±
.XXX-- ±
.XXXX- ±
ANGLES: ±°
FINISHES: √

	DATE:	NAME:
ENGINEER:	2006-07-19	paul krueger
CHECKED:		

BluePrint Automation
Oostzee 26 3446CH Woerden; tel. 0348-410999
16037 Innovation Drive, Colonial Heights, VA 23834; tel 804-520-5400

MATERIAL:
REMARKS:
PROJECTION:

DESCRIPTION:
TURNBUCKLE ASSEMBLY
COLLATOR

SCALE: 1:2
SHEET: A3

DRAWING NUMBER: **210-193**
REVISION: B
PAGE: 1 OF: 1

WEIGHT: g

© 2005 Drawing remains property of BluePrint Automation, Inc., All rights reserved

MFG INFO	
JOB:	067510-1-1
ASSY:	2148-089
QTY:	2
PART NO:	2148-089
COLOR:	Stainless Steel
USER:	
DATE:	10/22/2020

GENERAL NOTES:
1. EL PANEL NOT INCLUDED IN DRAWING - INSIDE EL ENCLOSURE.
2. WIREWAY GASKET NOT INCLUDED IN DRAWING.

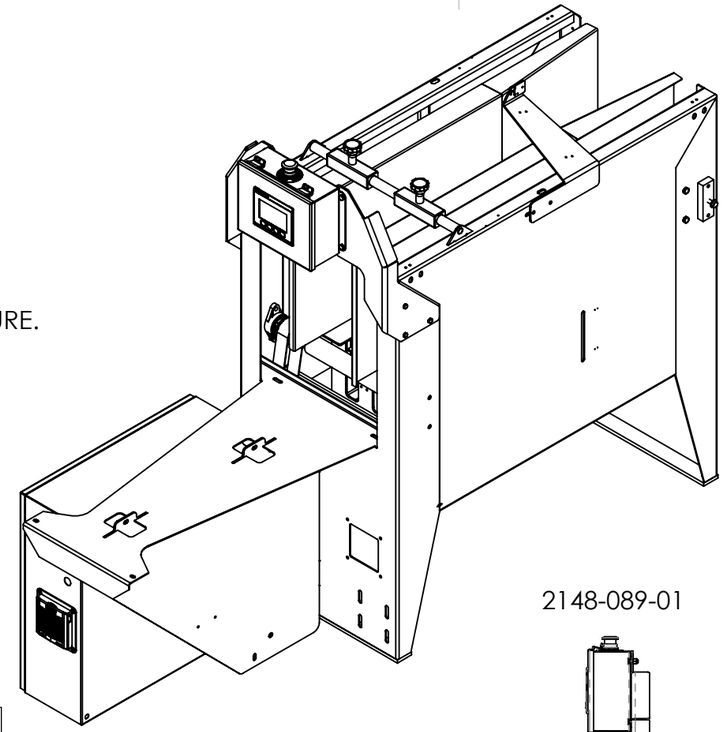

2148-089-01

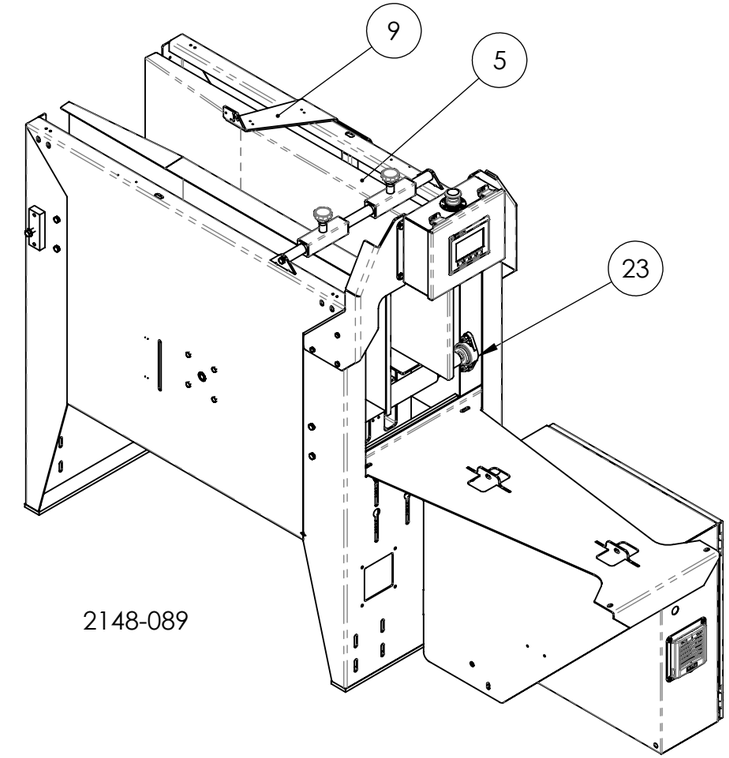

2148-089

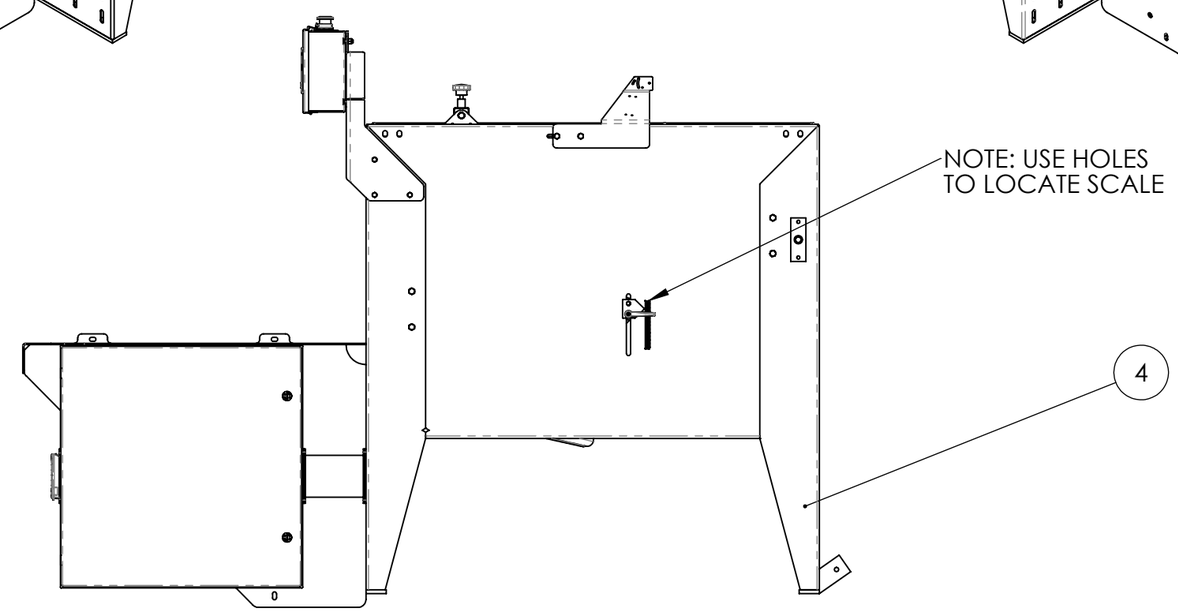

ITEM NO.	PART NO.	DESCRIPTION	2148-089/QTY.
25	100-528	BUSHING 1108 1 DIA BORE	2
24	3108-017	DRIVE ROLLER	2
23	102-130	BEARING, FLANGE, GRFT204-12	4
21	104-637	PULLEY, TIMING TL24H150 W/2012	1
20	104-638	BUSHING, TAPERLOCK 2012"	1
19	104-489	vlmstockBELT, TIMING 300H150 1.5"" x 30"	1
18	102-883	vlm stockBUSHING 1108 3/4 DIA BORE	1
17	100-636	PULLEY TIMING TL14H150 1108	3
16	356-418	WELDMENT, SMALL BAG GUIDE	1
15	3108-179-I	CATCH PLATE IMPERIAL	1
14	101-572	BELT TIMING 240H150	1
13	3156-386-12.0	SCALE, BLACK-ON-WHITE, 0-12.0	1
12	111-168	HANDLE KHA132 3/8""-16 X 0.78"""	1
11	3107-853	INDICATOR	1
10	3127-078	PHOTOCELL BRKT WLDMNT	1
9	3156-235	UPPER PHOTOCELL BRACKET	1
8	3126-834	NUTBAR	1
7	2143-987	COLLATOR WHEEL DRIVE	1
6	2143-989	COUNT BELT ASSEMBLY	1
5	2143-988	GUIDE EXIT ASM IMPERIAL	1
4	3157-910	FRAME WELDMENT	1
3	3140-390	COVER, LH	1
2	3140-388	COVER, RH	1
1	3140-389	COVER, LH	1
ITEM NO.	PART NO.	DESCRIPTION	2148-089/QTY.

ITEM NO.	PART NO.	DESCRIPTION	2148-089/QTY.
28	2146-456	COLLATOR ELECTRIC BOX, SS	1
27	2148-064	HMI KIT	1
26	3116-072	PIVOT BLOCK COLLATOR	2

REV.	VER.	DESCRIPTION	DATE	ENGINEER
G		REMOVED EXTRA PHOTOCELL BRACKET, HANDLE, INDICATOR, AND SCALE	01/22/2019	Katie Hildebrandt
F		REMOVED LOWER PE BRACKET AND EXTRA SCALE (RH CONFIG)	06/29/2017	Katie Hildebrandt
E		ADDED SCALE	06/08/2017	Christopher Banks
D		REMOVED UNUSED 3107-995, LOWER PE BRACKET	06/01/2017	Christopher Banks

REVISIONS

TOLERANCES UNLESS OTHERWISE NOTED
XX ±3mm
XX.X ±0.8mm
XX.XX ±0.3mm
ANGLES: ±0.5°
FINISHES: 125

	DATE:	NAME:
ENGINEER:	04/20/2016	Katie.Hildebrandt
SEED FILE:		

BluePrint Automation
Oostzee 26 3446CH Woerden; tel. 0348-410999
16037 Innovation Drive, Colonial Heights, VA 23834; tel 804-520-5400
1801 Iron Horse Drive, Suite B; Longmont, CO 80501; tel. 303-682-1200

MATERIAL:

REMARKS: ALL UNITS IN MM UNLESS OTHERWISE SPECIFIED

PROJECTION:

DESCRIPTION:
STD COLLATOR IMPERIAL W/ HMI KIT
LEFT HAND

SCALE: 1:15

SHEET: A3

DRAWING NUMBER: **2148-089**

REVISION: G

PAGE: 1 OF: 4

WEIGHT: 198864.05 g

© 2013 Drawing remains property of BluePrint Automation, Inc., All rights reserved

MFG INFO	
JOB:	067510-1-1
ASSY:	2148-089
QTY:	2
PART NO:	2148-089
COLOR:	Stainless Steel
USER:	
DATE:	10/22/2020

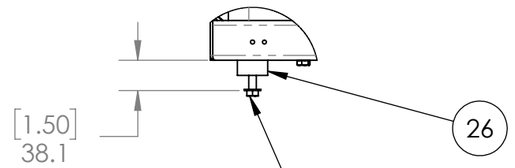

DETAIL J
SCALE 2 : 15

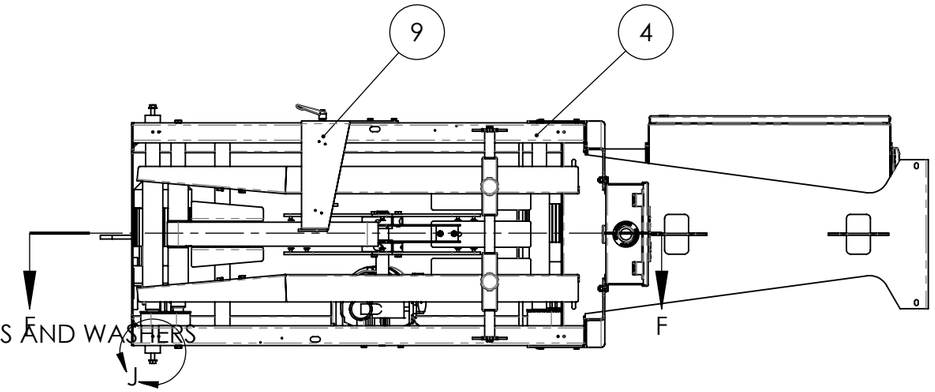

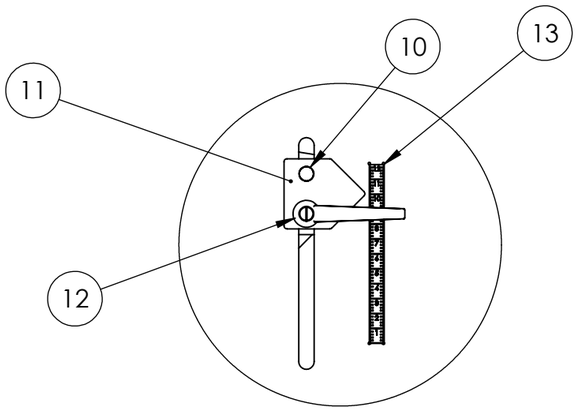

DETAIL K
SCALE 1 : 4

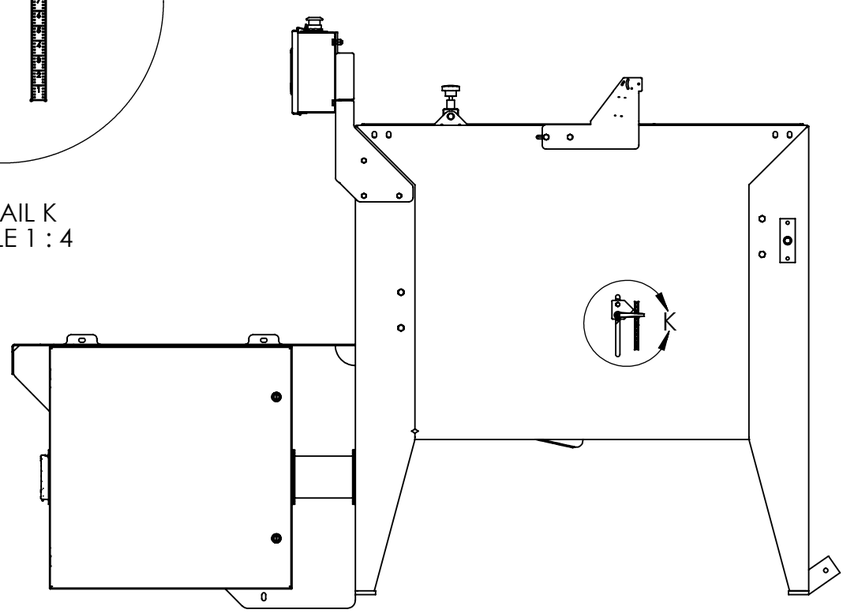

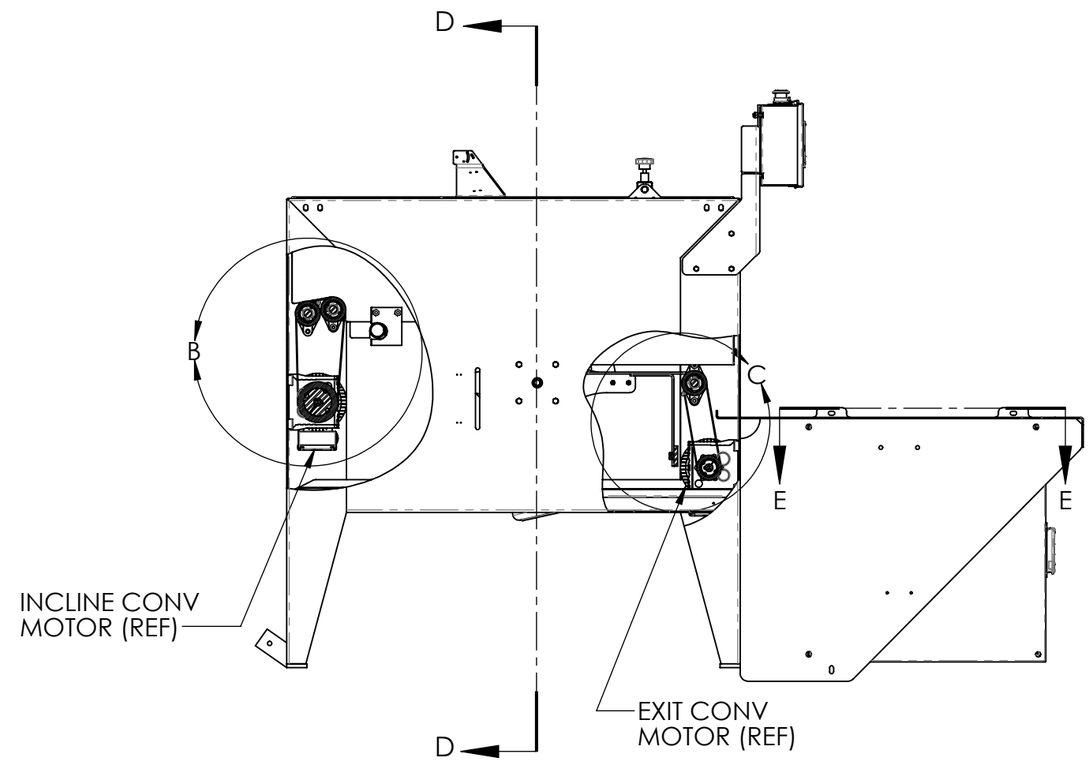

TOLERANCES UNLESS OTHERWISE NOTED

XX	±3mm	ANGLES:	±0.5°
XX.X	±0.8mm		
XX.XX	±0.3mm	FINISHES:	125

MATERIAL:

PROJECTION:

REMARKS: ALL UNITS IN MM UNLESS OTHERWISE SPECIFIED

	DATE:	NAME:
ENGINEER:	04/20/2016	Katie.Hildebrandt
SEED FILE:		

DESCRIPTION:
STD COLLATOR IMPERIAL W/ HMI KIT
LEFT HAND

SCALE: 1:15

SHEET: A3

DRAWING NUMBER: **2148-089**

REVISION: G

PAGE: 2 OF: 4

WEIGHT: 198864.05 g

REV.	VER.	DESCRIPTION	DATE	ENGINEER
G		REMOVED EXTRA PHOTOCELL BRACKET, HANDLE, INDICATOR, AND SCALE	01/22/2019	Katie Hildebrandt
F		REMOVED LOWER PE BRACKET AND EXTRA SCALE (RH CONFIG)	06/29/2017	Katie Hildebrandt
E		ADDED SCALE	06/08/2017	Christopher Banks
D		REMOVED UNUSED 3107-995, LOWER PE BRACKET	06/01/2017	Christopher Banks

REVISIONS

BluePrint Automation
Oostzee 26 3446CH Woerden; tel. 0348-410999
16037 Innovation Drive, Colonial Heights, VA 23834; tel 804-520-5400
1801 Iron Horse Drive, Suite B; Longmont, CO 80501; tel. 303-682-1200

© 2013 Drawing remains property of BluePrint Automation, Inc., All rights reserved

MFG INFO	
JOB:	067510-1-1
ASSY:	2148-089
QTY:	2
PART NO:	2148-089
COLOR:	Stainless Steel
USER:	
DATE:	10/22/2020

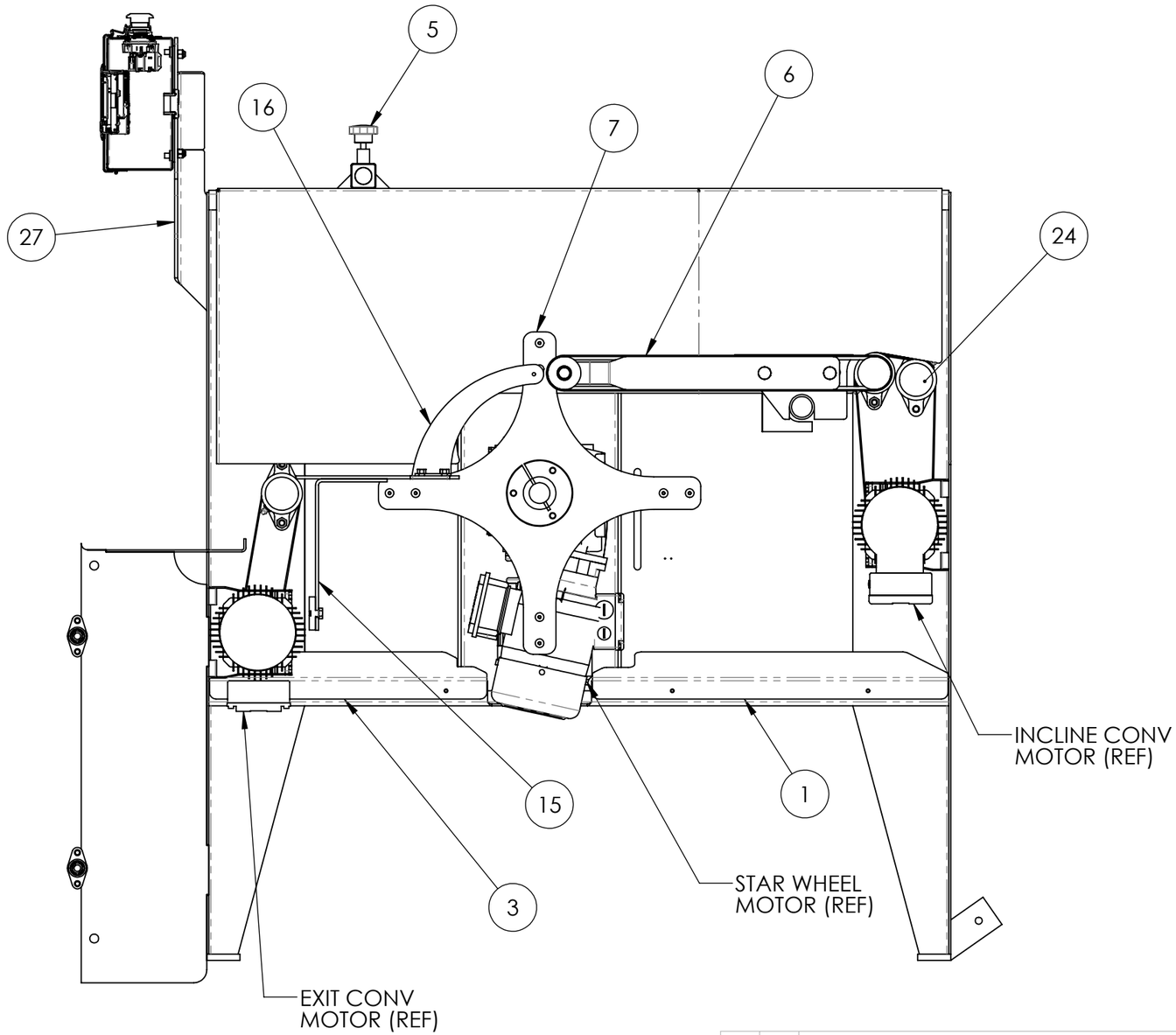

SECTION F-F

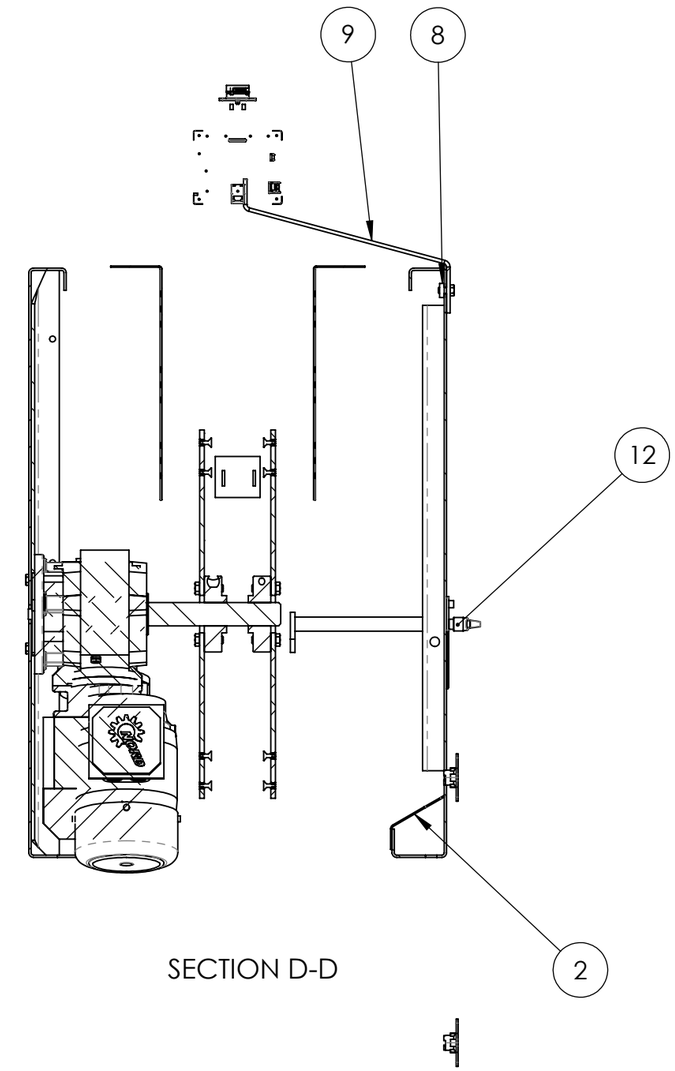

SECTION D-D

REV.	VER.	DESCRIPTION	DATE	ENGINEER
G		REMOVED EXTRA PHOTOCELL BRACKET, HANDLE, INDICATOR, AND SCALE	01/22/2019	Katie Hildebrandt
F		REMOVED LOWER PE BRACKET AND EXTRA SCALE (RH CONFIG)	06/29/2017	Katie Hildebrandt
E		ADDED SCALE	06/08/2017	Christopher Banks
D		REMOVED UNUSED 3107-995, LOWER PE BRACKET	06/01/2017	Christopher Banks

REVISIONS

TOLERANCES UNLESS OTHERWISE NOTED

XX	±3mm	ANGLES:	±0.5°
XX.X	±0.8mm		
XX.XX	±0.3mm	FINISHES:	125

	DATE:	NAME:
ENGINEER:	04/20/2016	Katie.Hildebrandt
SEED FILE:		

BluePrint Automation

Oostzee 26 3446CH Woerden; tel. 0348-410999
16037 Innovation Drive, Colonial Heights, VA 23834; tel 804-520-5400
1801 Iron Horse Drive, Suite B; Longmont, CO 80501; tel. 303-682-1200

MATERIAL:

REMARKS: ALL UNITS IN MM UNLESS OTHERWISE SPECIFIED

PROJECTION:

DESCRIPTION: STD COLLATOR IMPERIAL W/ HMI KIT LEFT HAND

SCALE: 1:8

SHEET: A3

DRAWING NUMBER: **2148-089**

REVISION: G

PAGE: 3 OF: 4

WEIGHT: 198864.05 g

© 2013 Drawing remains property of BluePrint Automation, Inc., All rights reserved

MFG INFO	
JOB:	067510-1-1
ASSY:	2148-089
QTY:	2
PART NO:	2148-089
COLOR:	Stainless Steel
USER:	
DATE:	10/22/2020

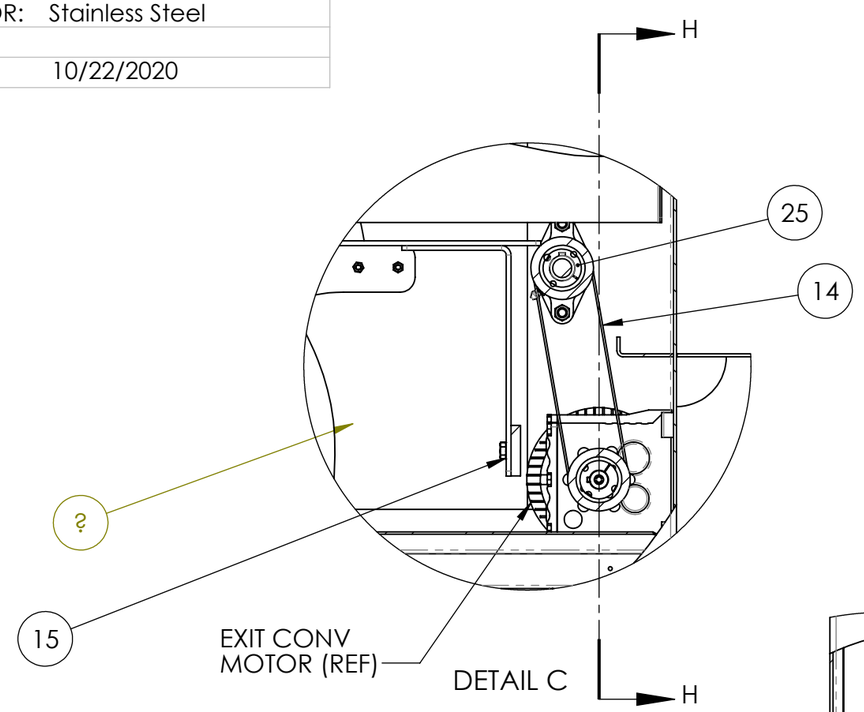

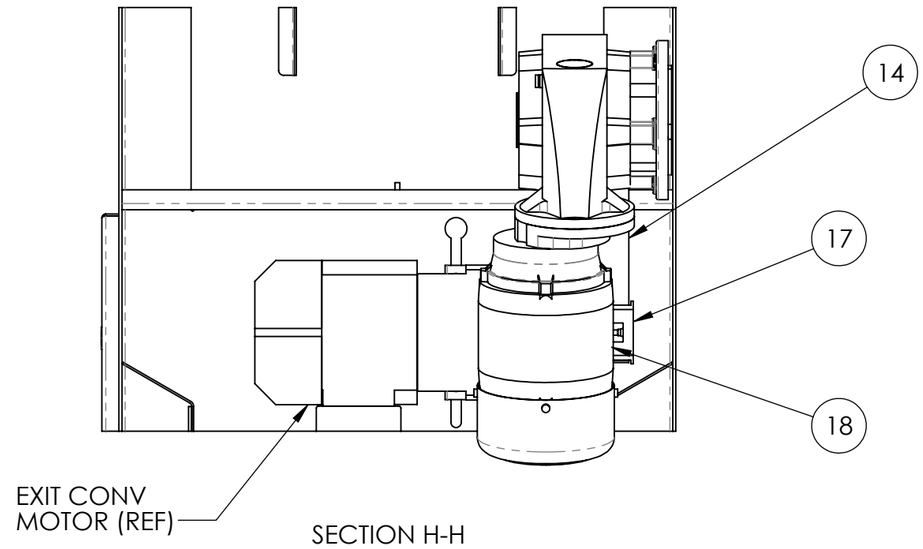

SECTION H-H

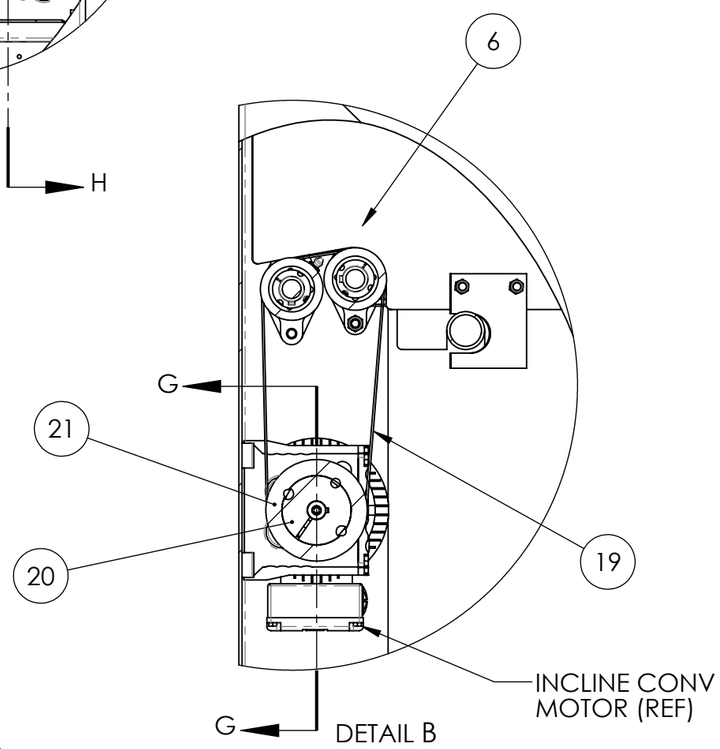

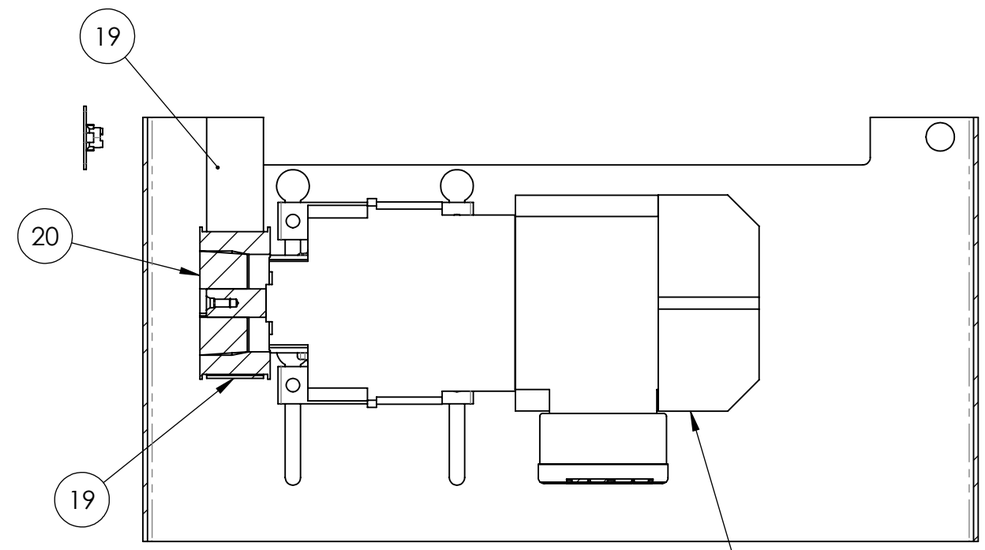

SECTION G-G
SCALE 1 : 4

INCLINE CONV
MOTOR (REF)

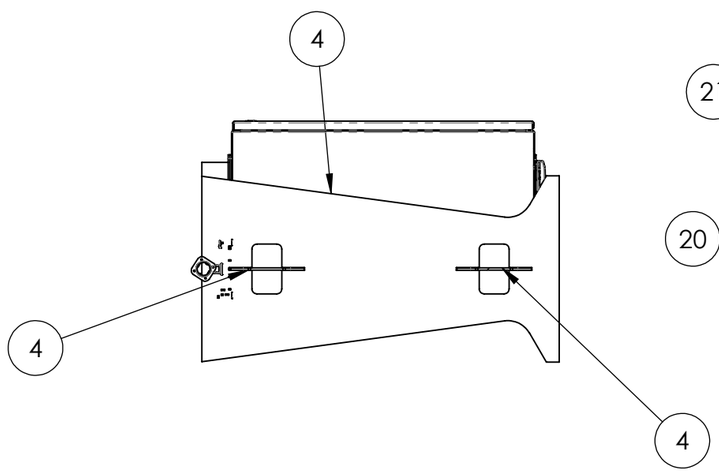

SECTION E-E
SCALE 1 : 12

REV.	VER.	DESCRIPTION	DATE	ENGINEER
G		REMOVED EXTRA PHOTOCELL BRACKET, HANDLE, INDICATOR, AND SCALE	01/22/2019	Katie Hildebrandt
F		REMOVED LOWER PE BRACKET AND EXTRA SCALE (RH CONFIG)	06/29/2017	Katie Hildebrandt
E		ADDED SCALE	06/08/2017	Christopher Banks
D		REMOVED UNUSED 3107-995, LOWER PE BRACKET	06/01/2017	Christopher Banks

REVISIONS

TOLERANCES UNLESS OTHERWISE NOTED

XX	±3mm	ANGLES:	±0.5°
XX.X	±0.8mm		
XX.XX	±0.3mm	FINISHES:	125

	DATE:	NAME:
ENGINEER:	04/20/2016	Katie.Hildebrandt
SEED FILE:		

BluePrint Automation
Oostzee 26 3446CH Woerden; tel. 0348-410999
16037 Innovation Drive, Colonial Heights, VA 23834; tel 804-520-5400
1801 Iron Horse Drive, Suite B; Longmont, CO 80501; tel. 303-682-1200

MATERIAL:

REMARKS: ALL UNITS IN MM UNLESS OTHERWISE SPECIFIED

PROJECTION:

DESCRIPTION:
STD COLLATOR IMPERIAL W/ HMI KIT
LEFT HAND

SCALE: 1:6

SHEET: A3

DRAWING NUMBER: **2148-089**

REVISION: G

PAGE: 4 OF: 4

WEIGHT: 198864.05 g

© 2013 Drawing remains property of BluePrint Automation, Inc., All rights reserved

MFG INFO	
JOB:	067510-1-1
ASSY:	2148-089
QTY:	2
PART NO:	2143-987
COLOR:	Stainless Steel

NOTES:
1. SMALL COLLATOR BLADES SHOWN FOR REFERENCE ONLY
2. SPOKE WHEEL ASSEMBLY INSTRUCTIONS ON SHEET 2
3. DETAIL VIEWS ON SHEET 3

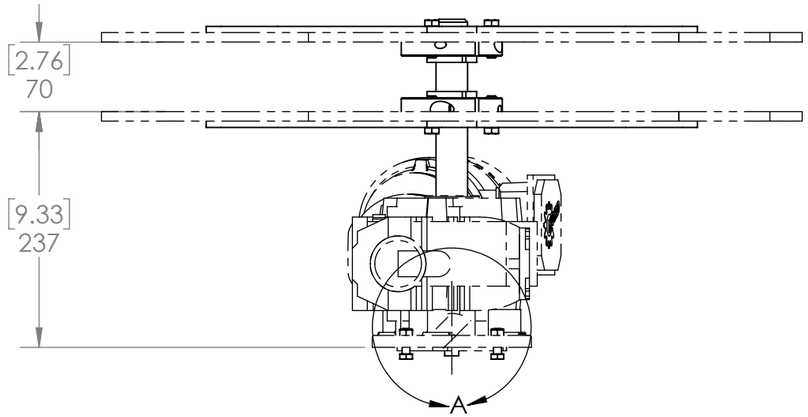

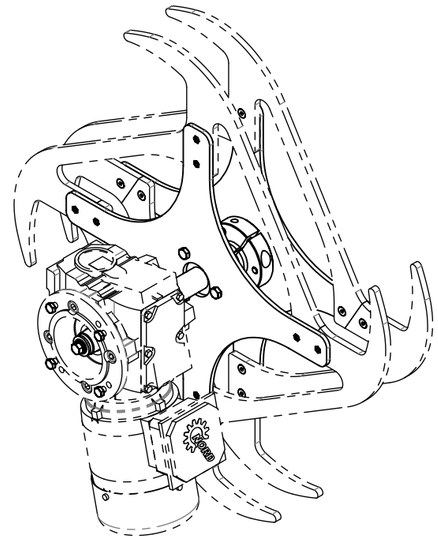

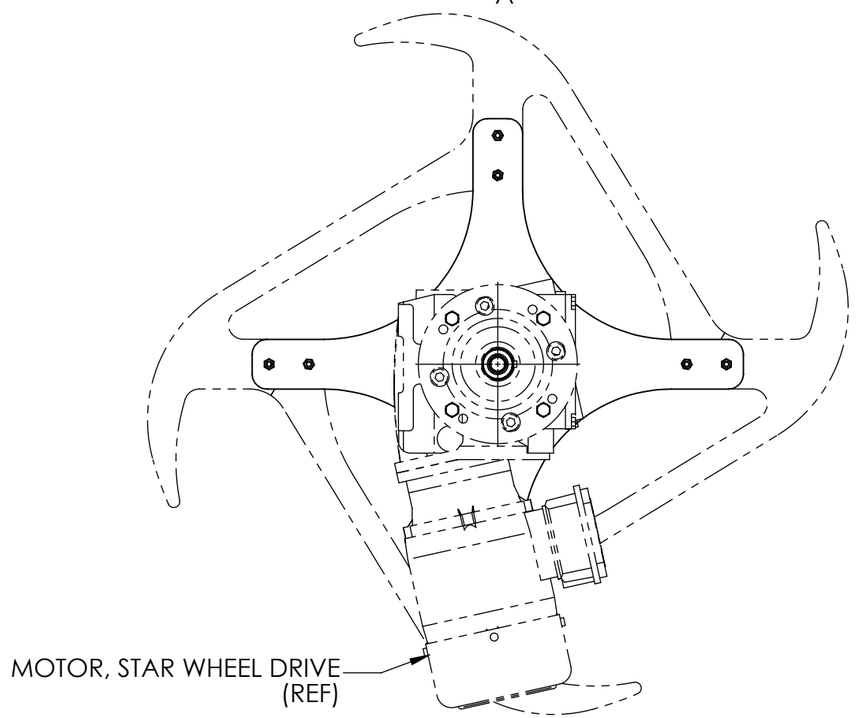

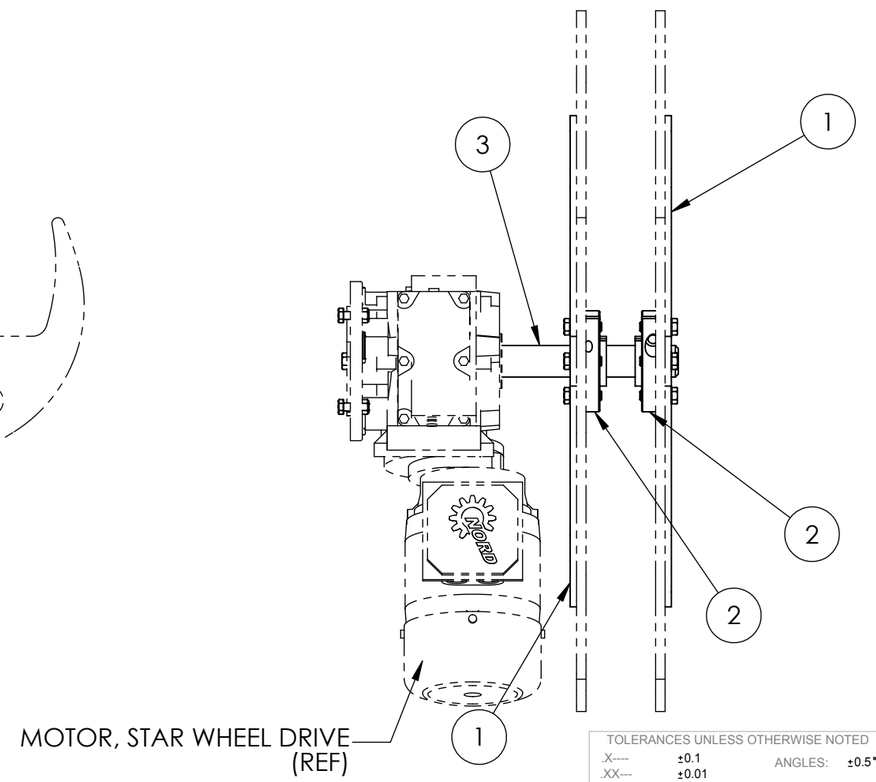

ITEM NO.	PART NO.	DESCRIPTION	Default/QTY.
5	1025-500	PRESS NUT 1/4x20 BFL-420-5	16
4	3108-105	DRIVE SHAFT WASHER	1
3	3127-077	COLLATOR WHEEL SHAFT	1
2	3127-075	LOCKING COLLAR	2
1	3107-826	SPOKE WHEEL	2

REV.	VER.	DESCRIPTION	DATE	ENGINEER
B		EXCLUDED STAR WHEEL FROM BOM	08/31/2015	Katie Hildebrandt

REVISIONS

TOLERANCES UNLESS OTHERWISE NOTED

.X----	±0.1	ANGLES:	±0.5°
.XX---	±0.01		
.XXX--	±0.005	FINISHES:	125
.XXXX-	±0.0005		

	DATE:	NAME:
ENGINEER:	08/13/2014	Bill.Davis
CHECKED:		

BluePrint Automation
Oostzee 26 3446CH Woerden; tel. 0348-410999
16037 Innovation Drive, Colonial Heights, VA 23834; tel 804-520-5400
1801 Iron Horse Drive, Suite B; Longmont, CO 80501; tel. 303-682-1200

MATERIAL:

REMARKS: ALL UNITS IN MM UNLESS OTHERWISE SPECIFIED

PROJECTION:

DESCRIPTION: COLLATOR WHEEL DRIVE STANDARD

SCALE: 1:6

SHEET: A3

DRAWING NUMBER: **2143-987**

REVISION: B

PAGE: 1 OF: 3

WEIGHT: 16527.68 g

© 2005 Drawing remains property of BluePrint Automation, Inc., All rights reserved

MFG INFO	
JOB:	067510-1-1
ASSY:	2148-089
QTY:	2
PART NO:	2143-987
COLOR:	Stainless Steel

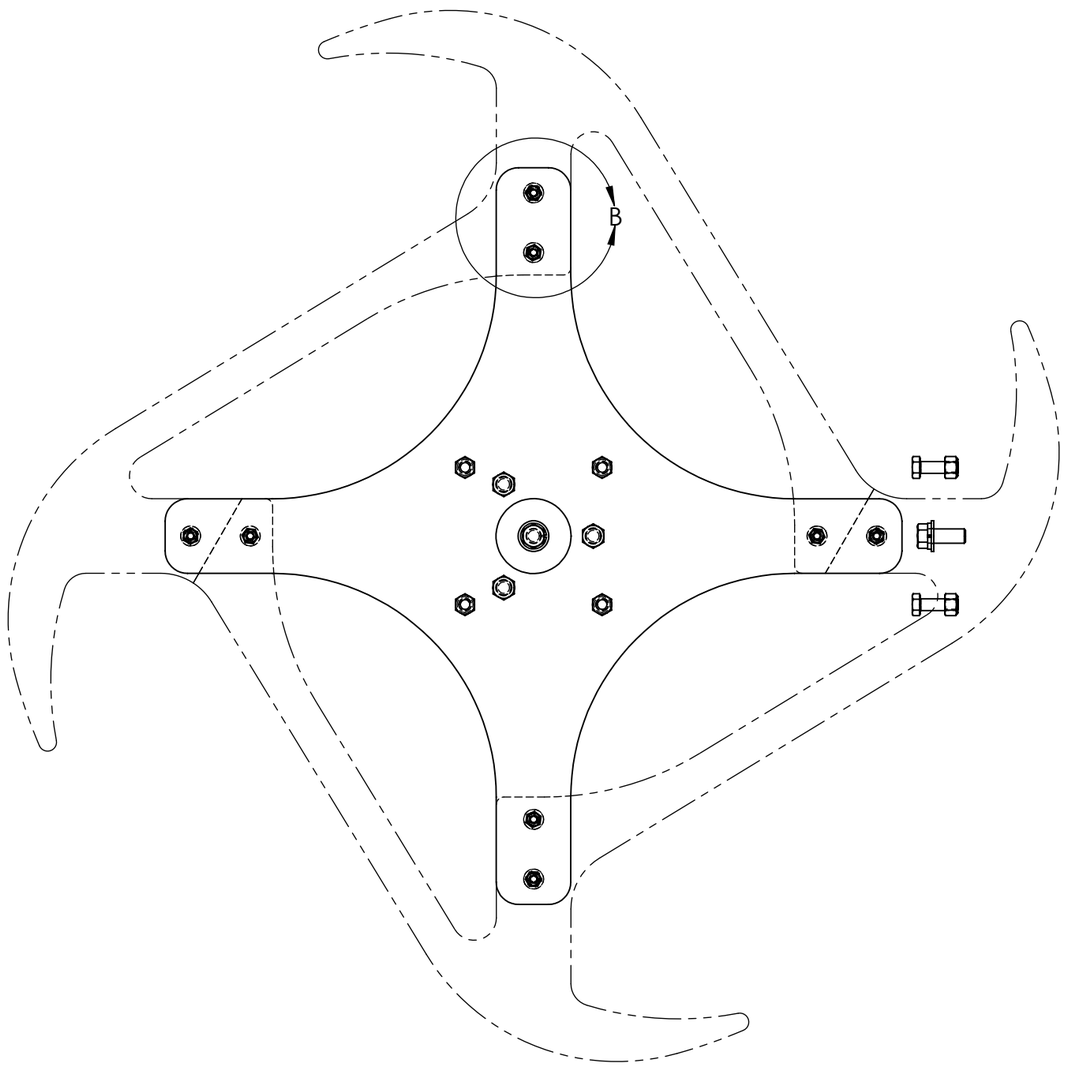

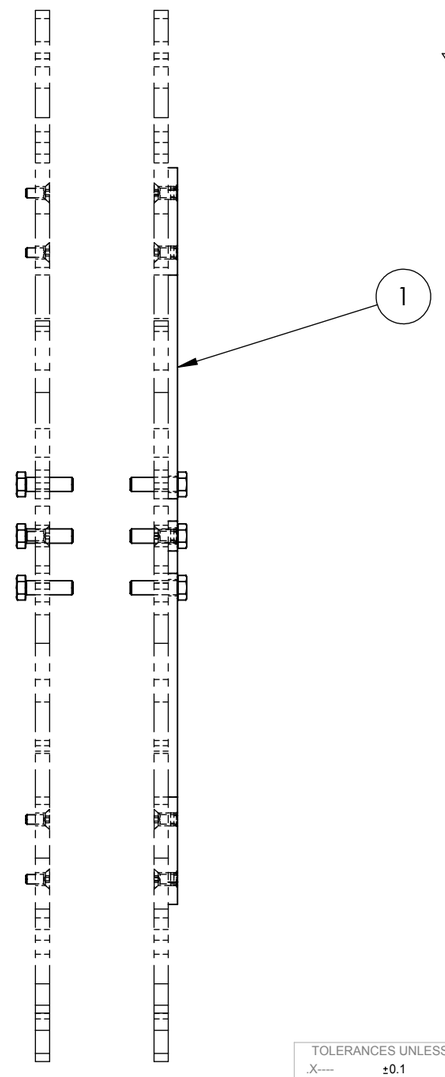

NOTE:
INSERT 1/4-20 PRESS NUTS FLUSH WITH SPOKE WHEEL SURFACE - 8X PER SPOKE WHEEL

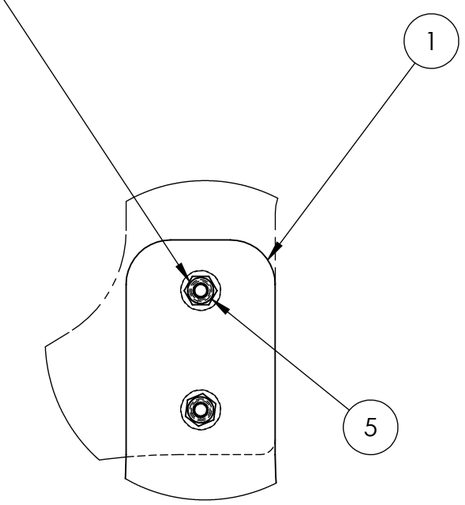

DETAIL B
SCALE 1 : 2

REV.	VER.	DESCRIPTION	DATE	ENGINEER
B		EXCLUDED STAR WHEEL FROM BOM	08/31/2015	Katie Hildebrandt

REVISIONS

TOLERANCES UNLESS OTHERWISE NOTED

.X---	±0.1	ANGLES:	±0.5°
.XX---	±0.01		
.XXX--	±0.005	FINISHES:	125
.XXXX-	±0.0005		

	DATE:	NAME:
ENGINEER:	08/13/2014	Bill.Davis
CHECKED:		

BluePrint Automation
Oostzee 26 3446CH Woerden; tel. 0348-410999
16037 Innovation Drive, Colonial Heights, VA 23834; tel 804-520-5400
1801 Iron Horse Drive, Suite B; Longmont, CO 80501; tel. 303-682-1200

MATERIAL:

REMARKS: ALL UNITS IN MM UNLESS OTHERWISE SPECIFIED

PROJECTION:

DESCRIPTION:
COLLATOR WHEEL DRIVE STANDARD

SCALE: 1:4

SHEET: A3

DRAWING NUMBER: **2143-987**

REVISION: B

PAGE: 2 OF: 3

WEIGHT: 16527.68 g

© 2005 Drawing remains property of BluePrint Automation, Inc., All rights reserved

MFG INFO	
JOB:	067510-1-1
ASSY:	2148-089
QTY:	2
PART NO:	2143-987
COLOR:	Stainless Steel

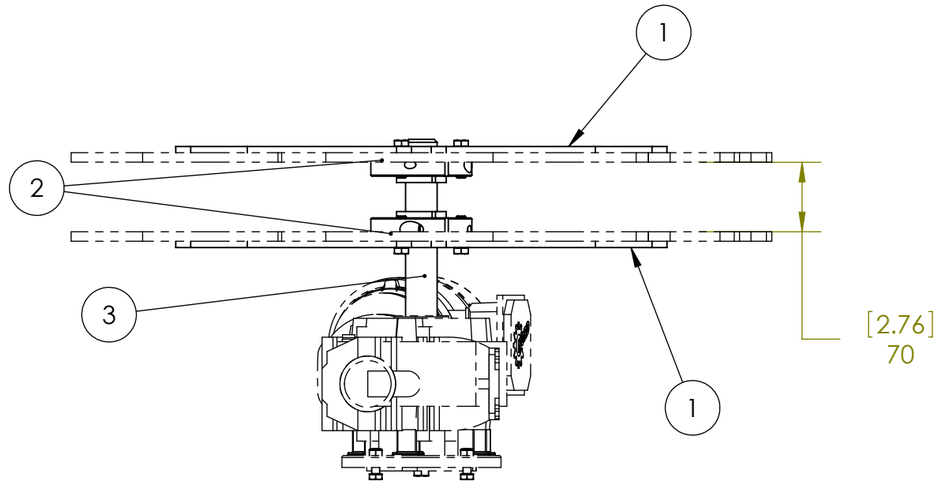

NOTE:
MOUNT COUNT BELT FIRST; THEN ADJUST WHEELS (1) ON DRIVE SHAFT (3) WITH EQUAL CLEARANCE TO THE EDGES OF THE COUNT BELT

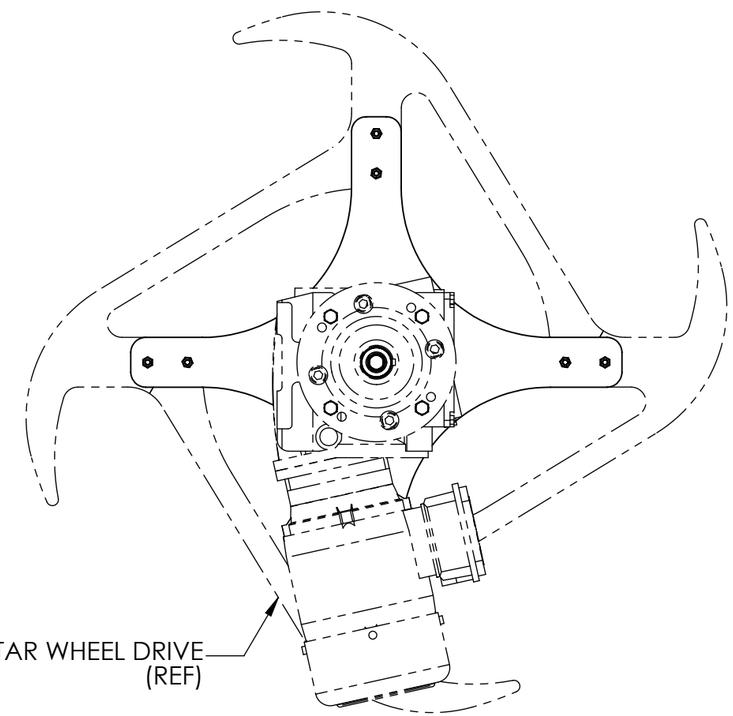

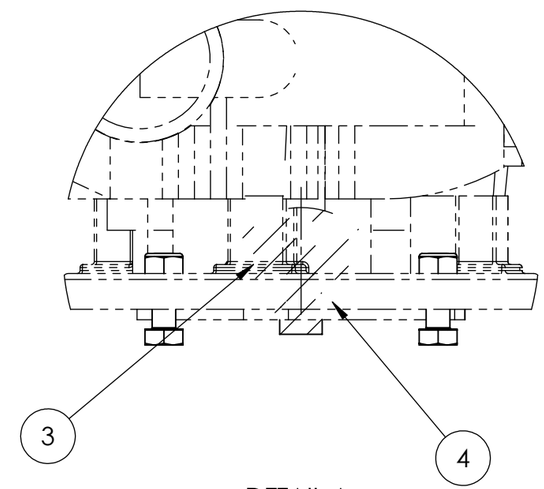

DETAIL A
SCALE 1 : 2

REV.	VER.	DESCRIPTION	DATE	ENGINEER
B		EXCLUDED STAR WHEEL FROM BOM	08/31/2015	Katie Hildebrandt

REVISIONS

TOLERANCES UNLESS OTHERWISE NOTED
.X---- ±0.1
.XX--- ±0.01
.XXX-- ±0.005
.XXXX- ±0.0005
ANGLES: ±0.5°
FINISHES: 125

	DATE:	NAME:
ENGINEER:	08/13/2014	Bill.Davis
CHECKED:		

BluePrint Automation
Oostzee 26 3446CH Woerden; tel. 0348-410999
16037 Innovation Drive, Colonial Heights, VA 23834; tel 804-520-5400
1801 Iron Horse Drive, Suite B; Longmont, CO 80501; tel. 303-682-1200

MATERIAL:

REMARKS: ALL UNITS IN MM UNLESS OTHERWISE SPECIFIED

PROJECTION:

DESCRIPTION:
COLLATOR WHEEL DRIVE
STANDARD

SCALE: 1:6

SHEET: A3

DRAWING NUMBER: **2143-987**

REVISION: B

PAGE: 3 OF: 3

WEIGHT: 16527.68 g

© 2005 Drawing remains property of BluePrint Automation, Inc., All rights reserved

MFG INFO	
JOB:	067510-1-1
ASSY:	2148-089
QTY:	2
PART NO:	2143-989
COLOR:	Stainless Steel

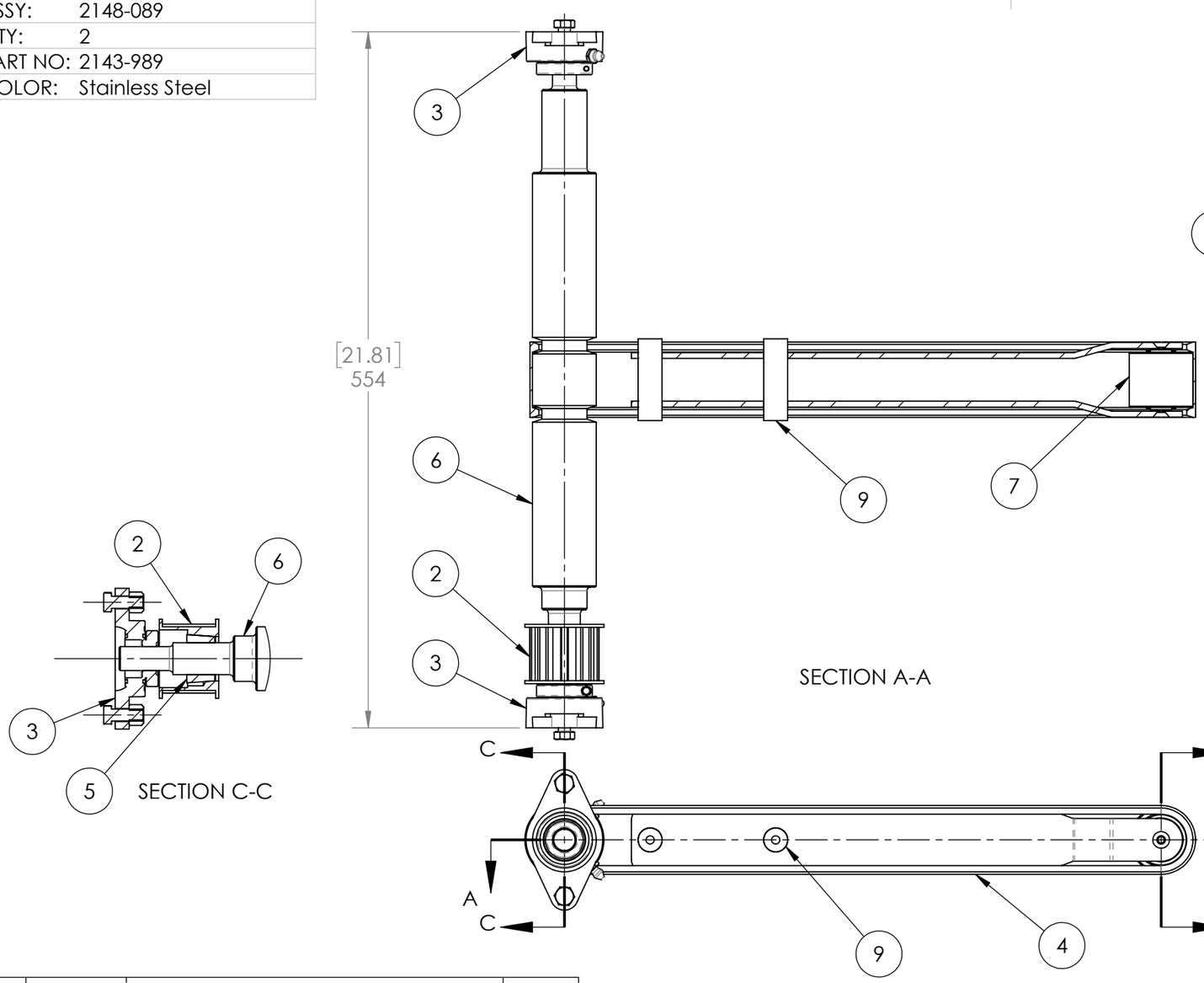

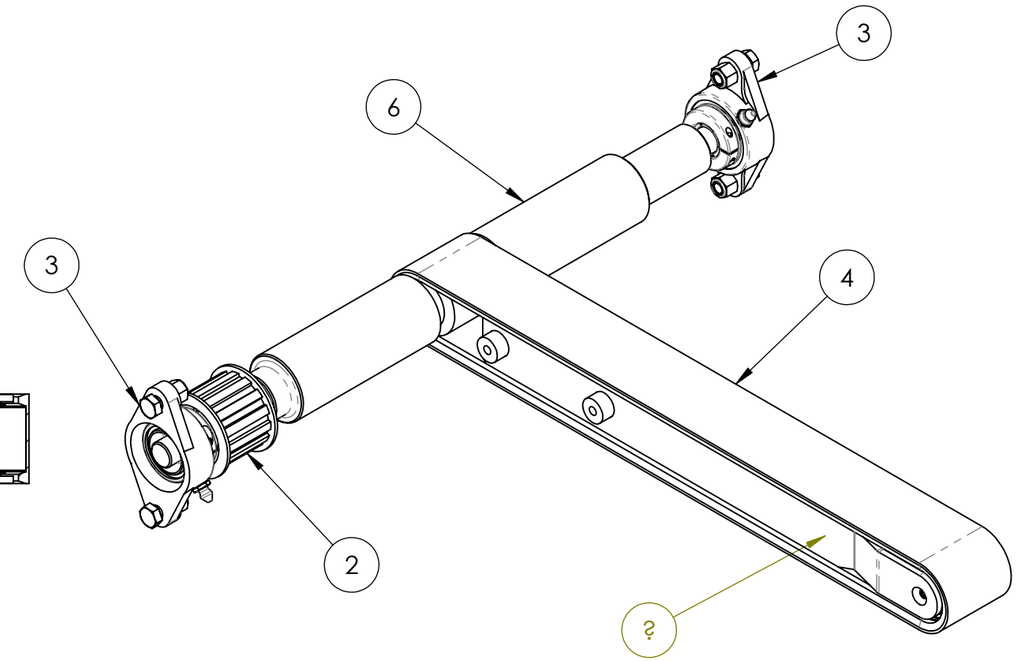

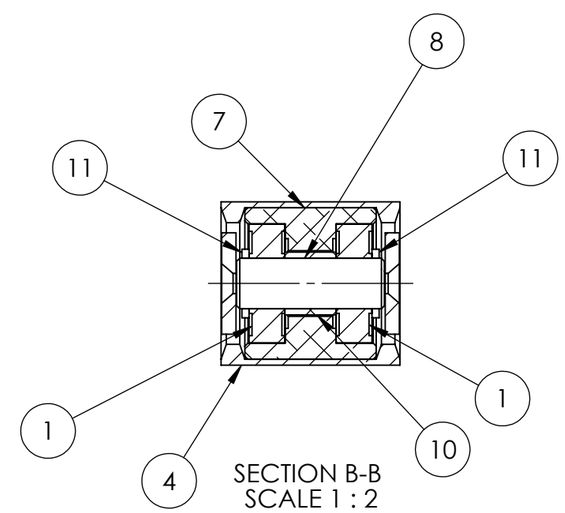

ITEM NO.	PART NO.	DESCRIPTION	QTY.
11	3107-795	BEARING SPACER	2
10	3107-794	BEARING SPACER	1
9	3127-062	COUNT FRAME WLDMT	1
8	3127-059	IDLER SHAFT IMPERIAL	1
7	3107-789	COUNT BELT IDLER PULLEY	1
6	3128-889	STANDARD DRIVE ROLLER	1
5	100-528	BUSHING 1108 1 DIA BORE	1
4	109-223	BELT BLP210 60MM X 1110MM LONG	1
3	102-130	BEARING, FLANGE, GRFT204-12	2
2	100-636	PULLEY TIMING TL14H150 1108	1
1	106-390	BEARING, RADIAL 62032RS 40MM OD	2

REV.	VER.	DESCRIPTION	DATE	ENGINEER

REVISIONS

TOLERANCES UNLESS OTHERWISE NOTED

.X----	±0.1	ANGLES:	±0.5°
.XX---	±0.01		
.XXX--	±0.005	FINISHES:	125
.XXXX-	±0.0005		

	DATE:	NAME:
ENGINEER:	08/13/2014	Bill.Davis
CHECKED:		

BluePrint Automation

Oostzee 26 3446CH Woerden; tel. 0348-410999
16037 Innovation Drive, Colonial Heights, VA 23834; tel 804-520-5400
1801 Iron Horse Drive, Suite B; Longmont, CO 80501; tel. 303-682-1200

MATERIAL:

REMARKS: ALL UNITS IN MM UNLESS OTHERWISE SPECIFIED

PROJECTION:

DESCRIPTION:

COUNT BELT ASSEMBLY STANDARD COLLATOR

SCALE: 1:4

SHEET: A3

DRAWING NUMBER: **2143-989**

REVISION: A

PAGE: 1 OF: 1

WEIGHT: 8754.94 g

© 2005 Drawing remains property of BluePrint Automation, Inc., All rights reserved

MFG INFO	
JOB:	067510-1-1
ASSY:	2148-089
QTY:	2
PART NO:	2148-064
COLOR:	Stainless Steel
USER:	
DATE:	10/22/2020

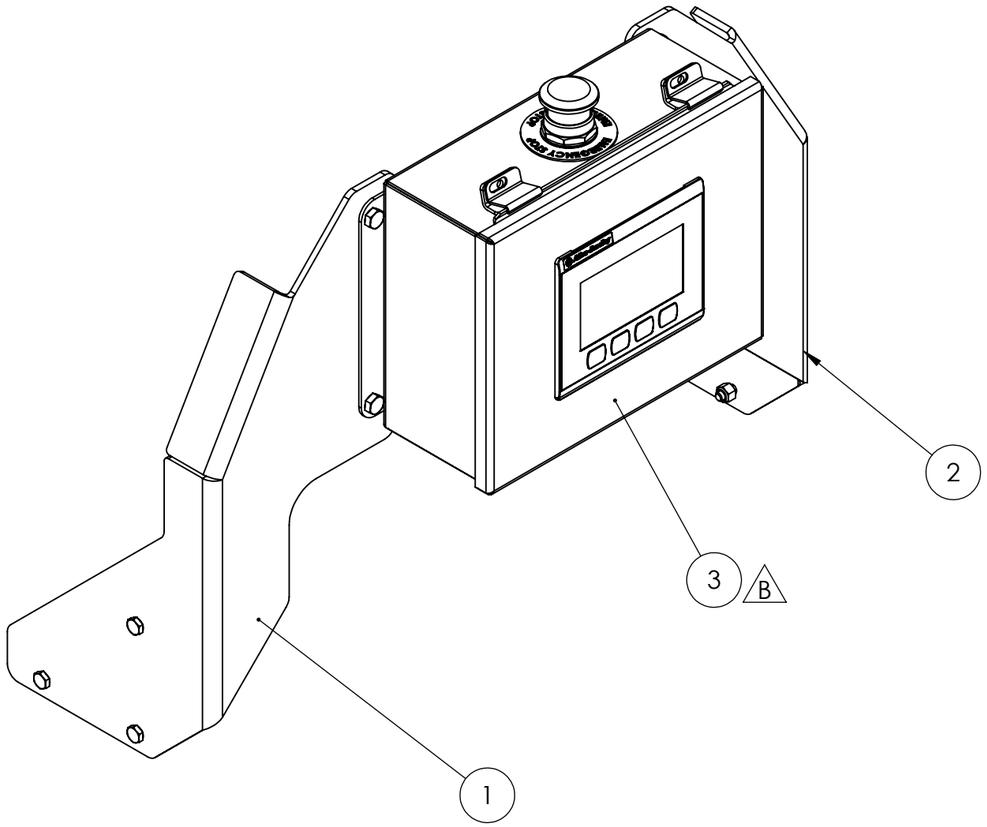

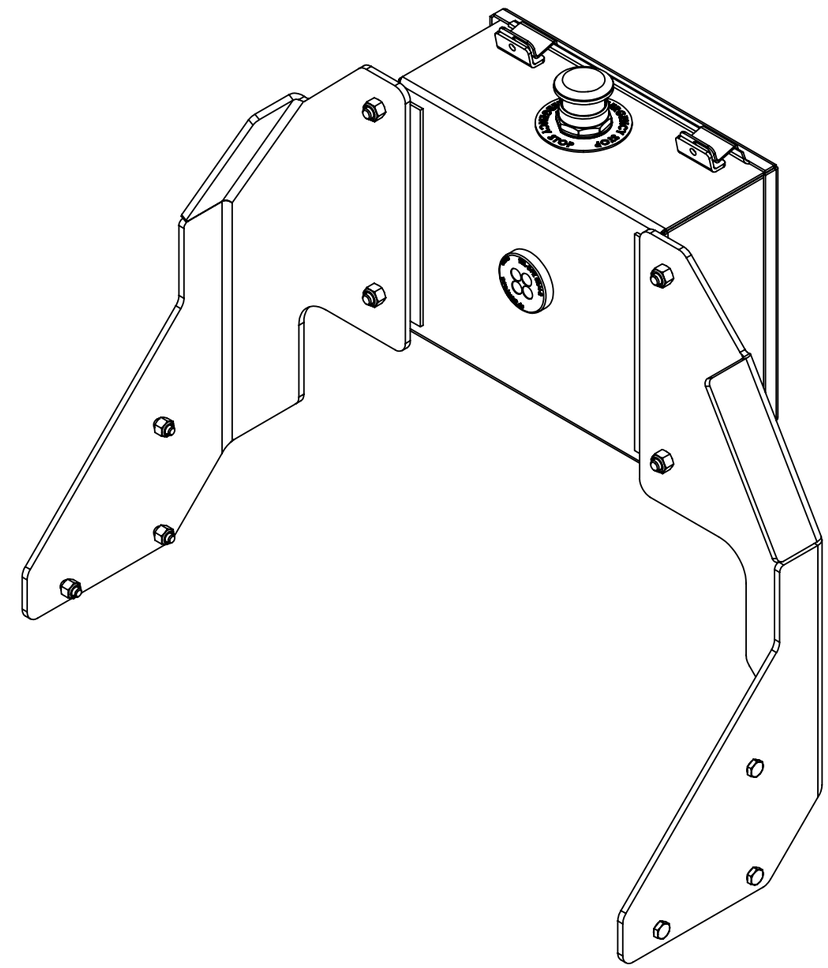

NOTE: PANEL, E-STOP BUTTON, E-STOP BUTTON LABEL, AND FITTING SHOWN FOR REFERENCE ONLY.

ITEM NO.	PART NO.	DESCRIPTION	QTY.
3	3530-543	COLLATOR HMI ENCL	1
2	3157-884	BRACKET, HMI, RH	1
1	3157-883	BRACKET, HMI, LH	1

REV.	VER.	DESCRIPTION	DATE	ENGINEER
B		3530-543 REPLACES 1028-681	07/13/2020	Katie Hildebrandt

REVISIONS

TOLERANCES UNLESS OTHERWISE NOTED
XX ±3mm
XX.X ±0.8mm
XX.XX ±0.3mm
ANGLES: ±°
FINISHES:

	DATE:	NAME:
ENGINEER:	04/19/2016	Katie.Hildebrandt
SEED FILE:		

BluePrint Automation
Oostzee 26 3446CH Woerden; tel. 0348-410999
16037 Innovation Drive, Colonial Heights, VA 23834; tel 804-520-5400
1801 Iron Horse Drive, Suite B; Longmont, CO 80501; tel. 303-682-1200

MATERIAL:
REMARKS:
PROJECTION:
DESCRIPTION: HMI KIT
SCALE: 1:4
SHEET: A3
DRAWING NUMBER: **2148-064**
REVISION: B
PAGE: 1 OF: 1
WEIGHT: g

© 2013 Drawing remains property of BluePrint Automation, Inc., All rights reserved

MFG INFO	
JOB:	067510-1-1
ASSY:	2148-089
QTY:	2
PART NO:	2143-988
COLOR:	Stainless Steel

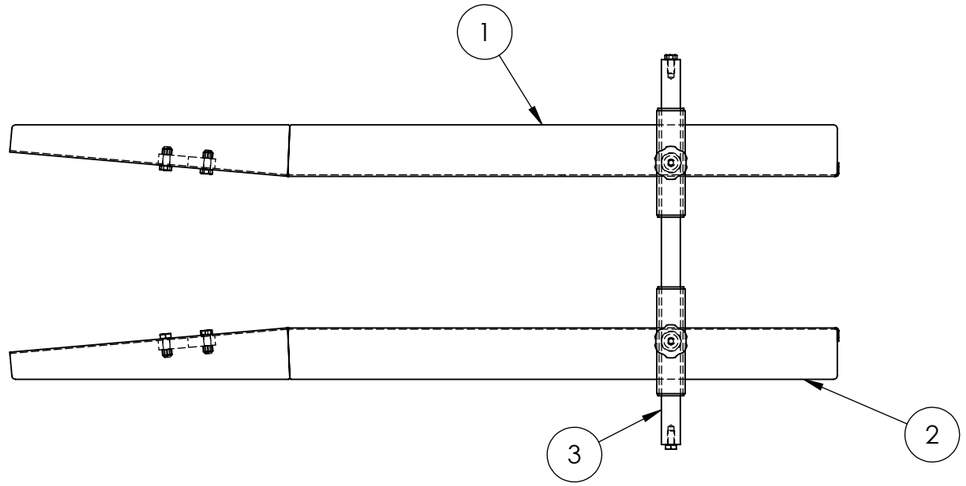

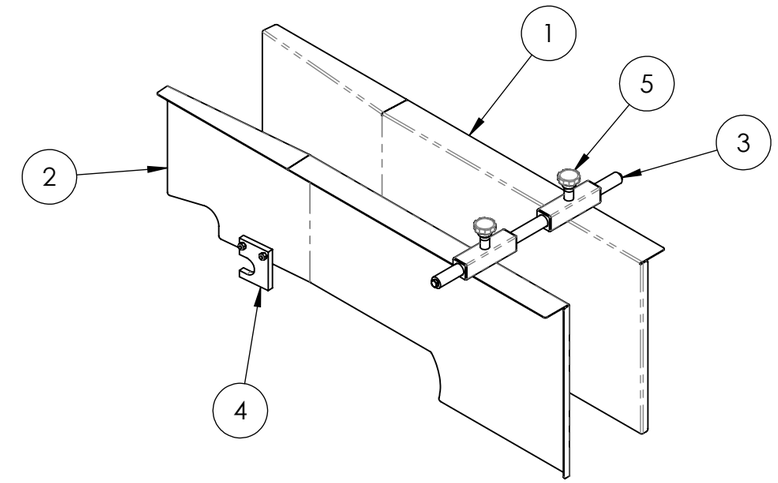

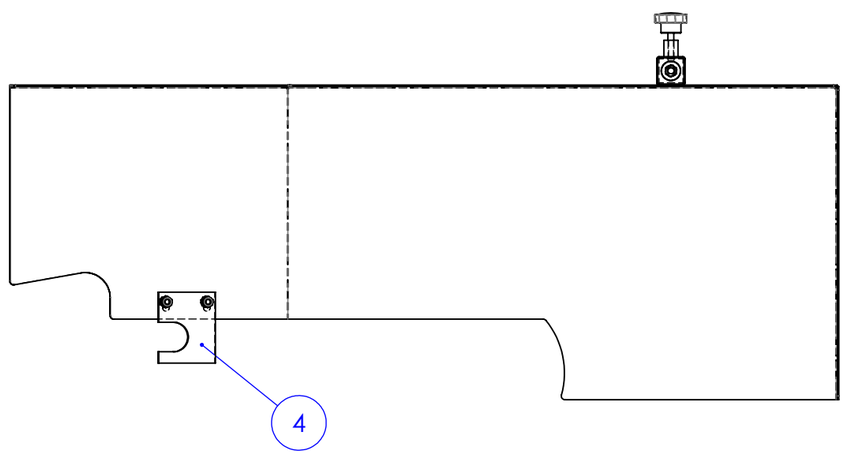

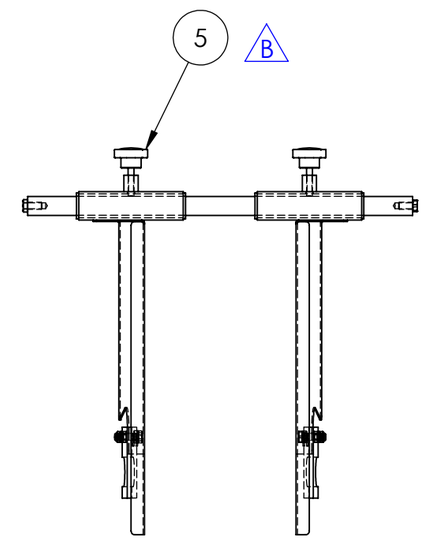

ITEM NO.	PART NO.	DESCRIPTION	QTY.
5	102-497	vlm stock KNOB DK27	2
4	3107-978	SLIDE BLOCK	2
3	3140-405	ADJUSTMENT SHAFT	1
2	3127-055	GUIDE WELDMENT, LH	1
1	3127-052	GUIDE WELDMENT, RH	1

REVISIONS

REV.	VER.	DESCRIPTION	DATE	ENGINEER
B		HANDLE WAS METRIC	05/31/2017	Christopher Banks

TOLERANCES UNLESS OTHERWISE NOTED

.X----	±0.1	ANGLES:	±0.5°
.XX---	±0.01		
.XXX--	±0.005	FINISHES:	125
.XXXX-	±0.0005		

	DATE:	NAME:
ENGINEER:	08/13/2014	Bill.Davis
CHECKED:		

BluePrint Automation
Oostzee 26 3446CH Woerden; tel. 0348-410999
16037 Innovation Drive, Colonial Heights, VA 23834; tel 804-520-5400
1801 Iron Horse Drive, Suite B; Longmont, CO 80501; tel. 303-682-1200

MATERIAL:

REMARKS: ALL UNITS IN MM UNLESS OTHERWISE SPECIFIED

PROJECTION:

DESCRIPTION: GUIDE EXIT ASSEMBLY STANDARD

SCALE: 1:8

SHEET: A3

DRAWING NUMBER: **2143-988**

REVISION: B

PAGE: 1 OF: 1

WEIGHT: 16881.93 g

© 2005 Drawing remains property of BluePrint Automation, Inc., All rights reserved

MFG INFO	
JOB:	067510-1-1
ASSY:	2148-089
QTY:	2
PART NO:	2146-456
COLOR:	Stainless Steel
USER:	
DATE:	10/22/2020

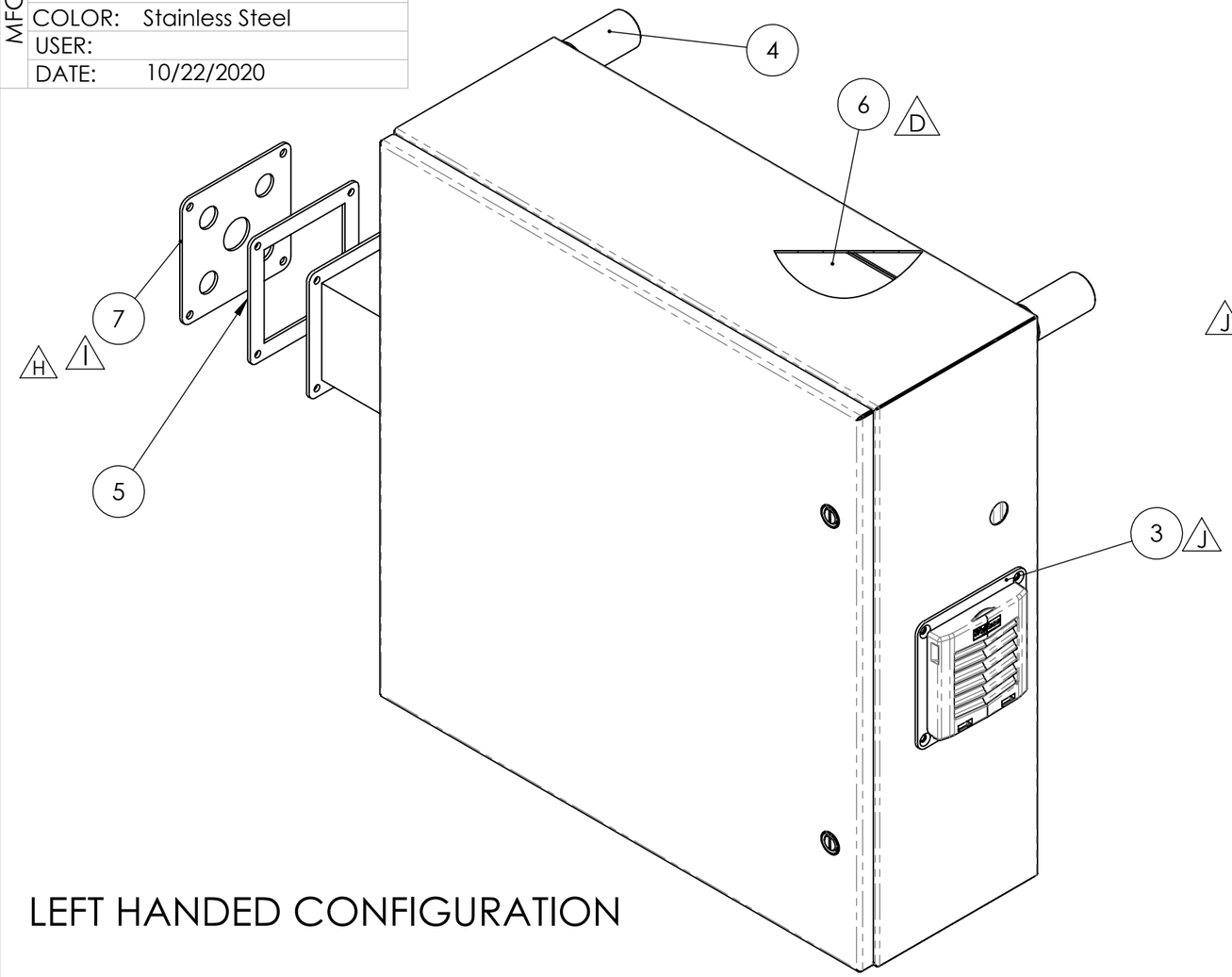

LEFT HANDED CONFIGURATION

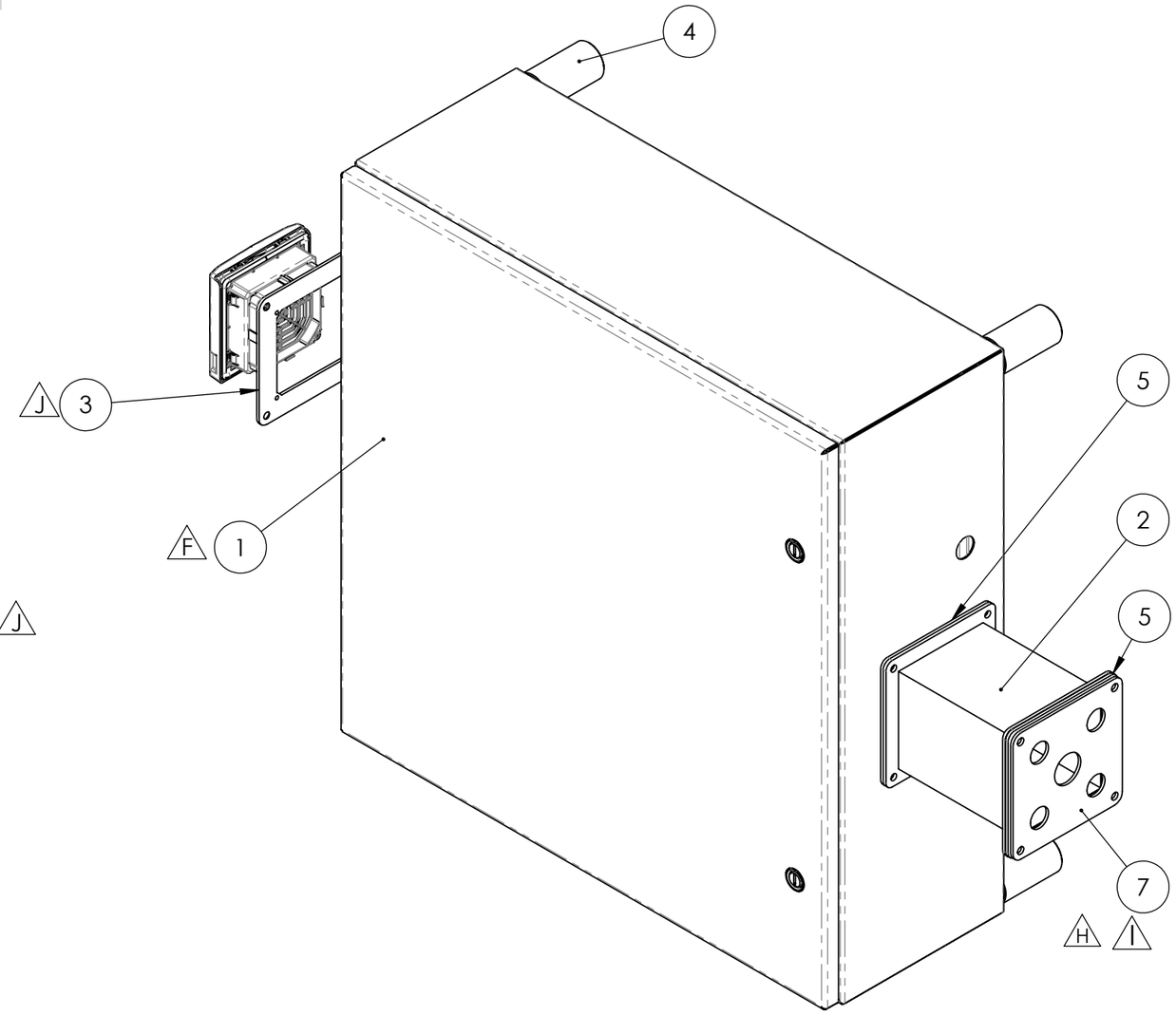

RIGHT HANDED CONFIGURATION

NOTE: EXHAUST FAN IS PART OF ELECTRICAL BOM
AND IS SHOWN FOR REFERENCE ONLY.

ITEM NO.	PART NO.	DESCRIPTION	2146-456/QTY.
7	3527-690-01	PLATE, CONDUIT ENTRY, SS	1
6	107-167	PANEL, CP2424G	1
5	102-847	WIREWAY, GASKET F44WG, 4"X4"	2
4	3107-996-01	SPACER, CABINET	3
3	3527-820	PLATE, FAN / EXHAUST MOUNT	1
2	1026-930	HOFFMAN F44WN6SS NIPPLE	1
1	3511-439	ENCLOSURE, MODIFIED	1

REVISIONS

REV.	VER.	DESCRIPTION	DATE	ENGINEER
J		3527-820 WAS 3146-196-SS	03/02/2020	Katie Hildebrandt
I		3510-690-01 WAS 3110-828	02/12/2020	Katie Hildebrandt
H		3110-828 WAS 3522-162	05/07/2019	Christopher Banks
G		ADDED 3522-162	05/03/2019	Erik Petter. Blix

TOLERANCES UNLESS OTHERWISE NOTED
XX ±3mm
XX.X ±0.8mm
XX.XX ±0.3mm
ANGLES: ±°
FINISHES: √

	DATE:	NAME:
ENGINEER:	08/28/2015	Katie.Hildebrandt
SEED FILE:		

BluePrint Automation
Oostzee 26 3446CH Woerden; tel. 0348-410999
16037 Innovation Drive, Colonial Heights, VA 23834; tel 804-520-5400
1801 Iron Horse Drive, Suite B; Longmont, CO 80501; tel. 303-682-1200

MATERIAL:
REMARKS:
PROJECTION:
DESCRIPTION: COLLATOR ELECTRIC BOX SS
SCALE: 1:5
SHEET: A3
DRAWING NUMBER: **2146-456**
REVISION: J
PAGE: 1 OF: 1
WEIGHT: g

© 2013 Drawing remains property of BluePrint Automation, Inc., All rights reserved

MFG INFO	
JOB:	067510-1-1
ASSY:	2144-270-01
QTY:	2
PART NO:	2144-270-01
COLOR:	Stainless Steel

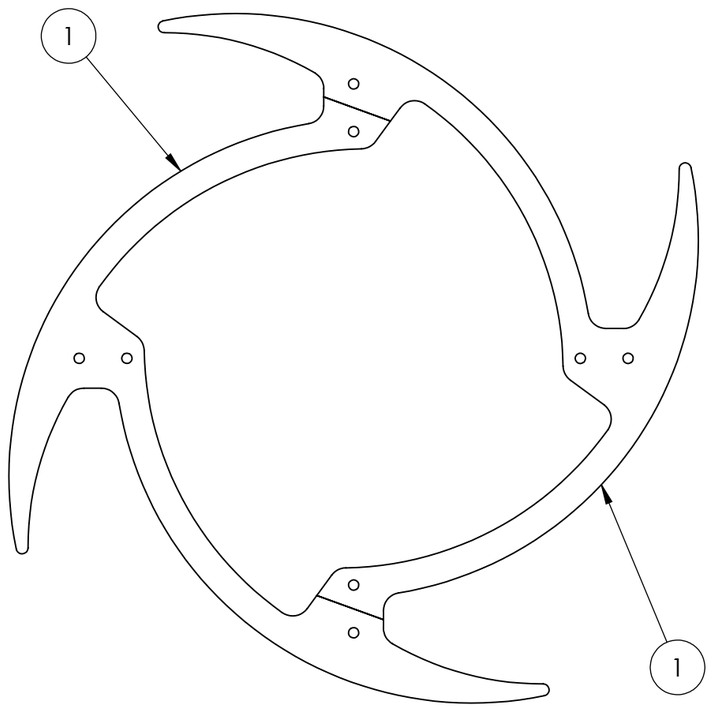

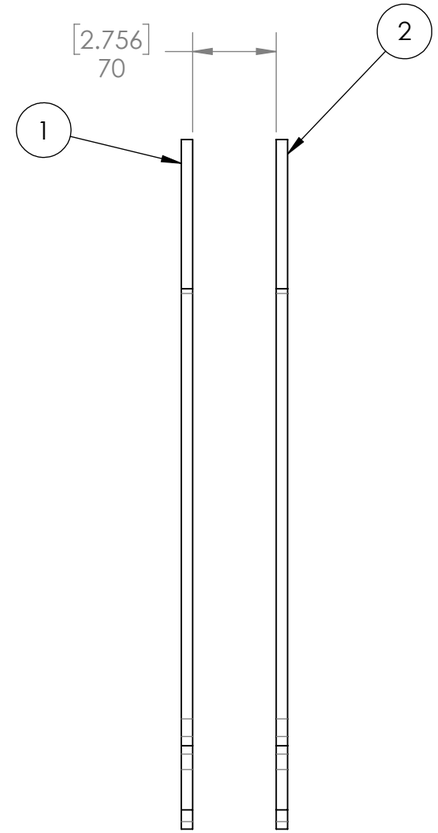

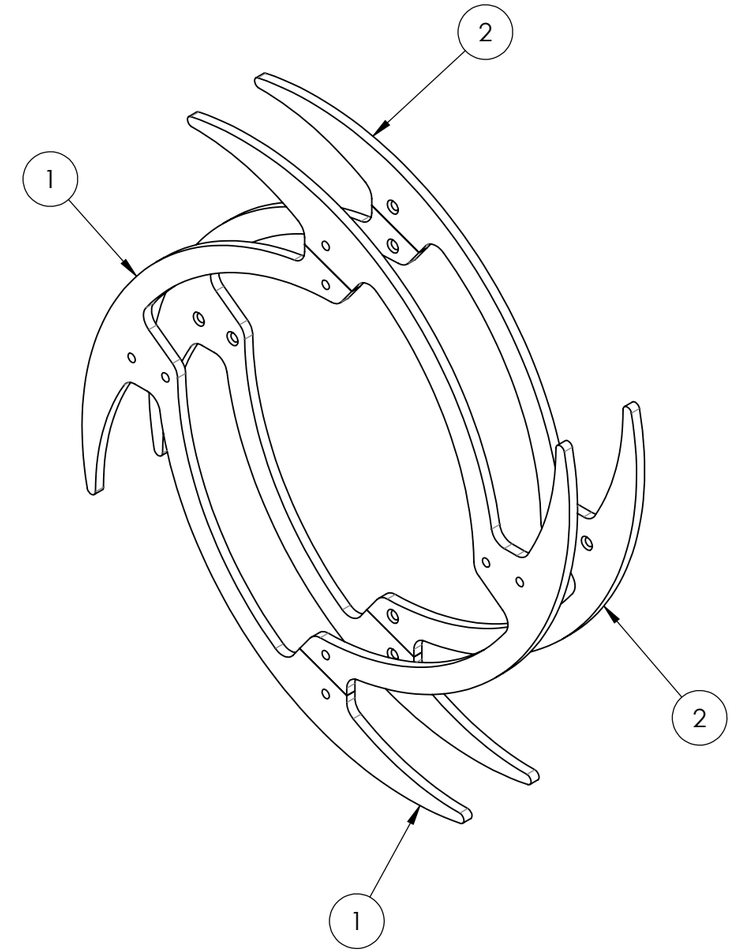

ITEM NO.	PART NO.	DESCRIPTION	QTY.
2	3107-891	COLLATOR BLADE SMALL BAG	2
1	3107-890	RH COLLATOR BLADE SMALL BAG	2

REV.	VER.	DESCRIPTION	DATE	ENGINEER

REVISIONS

TOLERANCES UNLESS OTHERWISE NOTED

.X----	±0.1	ANGLES:	±0.5°
.XX---	±0.01		
.XXX--	±0.005	FINISHES:	125
.XXXX-	±0.0005		

	DATE:	NAME:
ENGINEER:	11/13/2014	Bill.Davis
CHECKED:		

BluePrint Automation

Oostzee 26 3446CH Woerden; tel. 0348-410999
16037 Innovation Drive, Colonial Heights, VA 23834; tel 804-520-5400

MATERIAL:

REMARKS: ALL UNITS IN MM UNLESS OTHERWISE SPECIFIED

PROJECTION:

DESCRIPTION:

COLLATOR WHEEL, SMALL
STD COLLATOR, IMPERIAL

SCALE: 1:5

SHEET: A3

DRAWING NUMBER: **2144-270-01**

REVISION: A

PAGE: 1 OF: 1

WEIGHT: 2227.69 g

© 2005 Drawing remains property of BluePrint Automation, Inc., All rights reserved

MFG INFO	
JOB:	067510-1-1
ASSY:	2143-991-02
QTY:	2
PART NO:	2143-991-02
COLOR:	Stainless Steel

ASSEMBLY SHOWN IS FOR RH COLLATOR SIDE RAIL, CLAMPS, AND GUIDE BRACKETS FLIP TO OPPOSITE SIDE FOR LH.

PARTS SHOWN IN PHANTOM ARE PART OF INTERNAL COLLATOR ASSY (REF 2143-976)

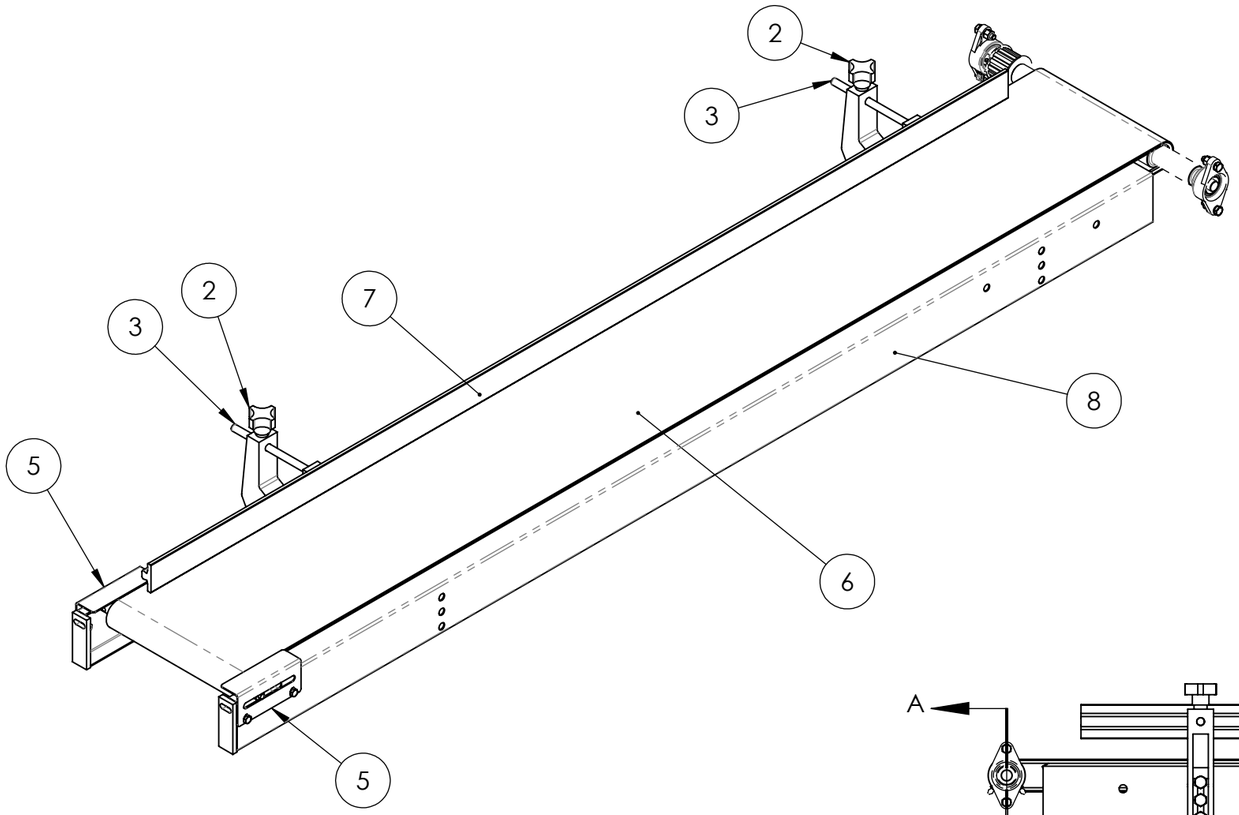

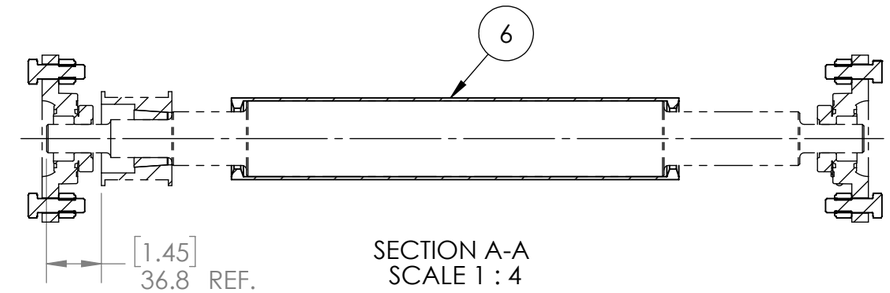

SECTION A-A
SCALE 1 : 4

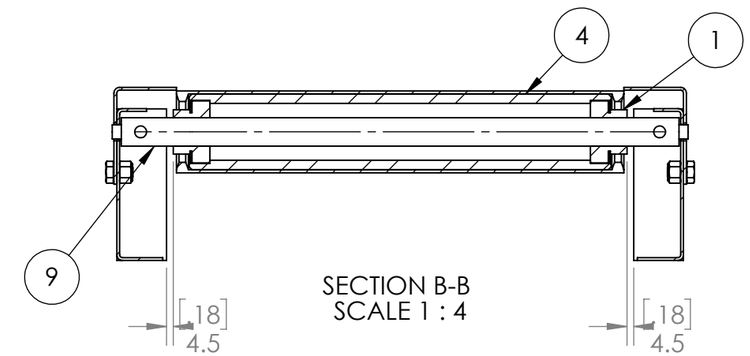

SECTION B-B
SCALE 1 : 4

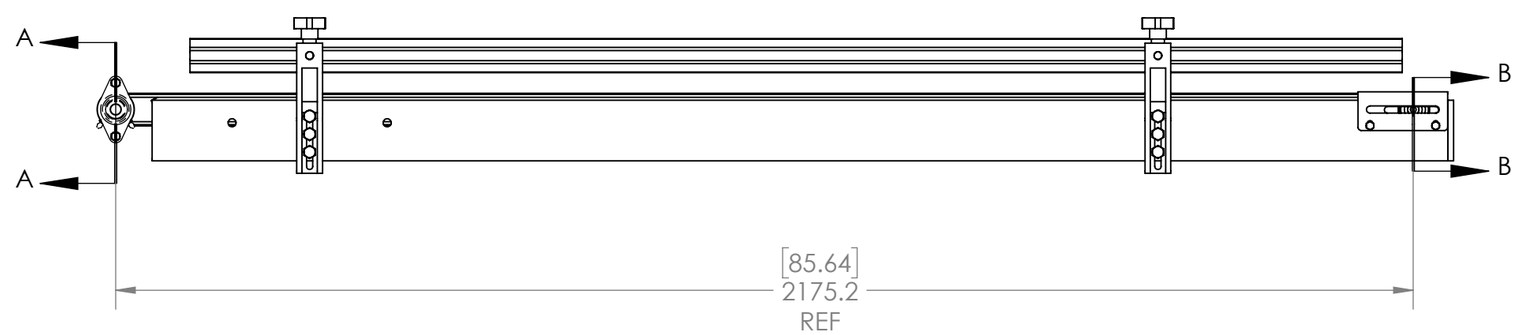

ITEM NO.	PART NO.	DESCRIPTION	QTY.
9	3126-802	IDLER SHAFT	1
8	3143-025-04	FRAME, EX CONV - 7'-0"	1
7	3143-041-03	SIDE RAIL - 80"	1
6	1028-554-02	BELT AP260 300MM X 3300MM	1
5	3107-910	EXIT CONVEYOR GUARD	2
4	3107-947	IDLER ROLLER	1
3	109-623	RAIL CLAMP & MOUNTING BAR VG0311270	2
2	109-622	BRACKET, GUIDE RAIL VG22112"	2
1	100-455	BEARING 3/4 BORE	2

REFERENCE: 204-859

REV.	VER.	DESCRIPTION	DATE	ENGINEER
C		ADDED CONFIGS, UPDATED MATES AND GUIDES	12/04/2014	Bill Davis
B		master model and corrected belt specification	11/18/2014	Bill Davis

REVISIONS

TOLERANCES UNLESS OTHERWISE NOTED
.X---- ±0.1
.XX--- ±0.01
.XXX-- ±0.005
.XXXX- ±0.0005
ANGLES: ±0.5°
FINISHES: 125

	DATE:	NAME:
ENGINEER:	10/03/2014	Bill.Davis
CHECKED:		

BluePrint Automation
Oostzee 26 3446CH Woerden; tel. 0348-410999
16037 Innovation Drive, Colonial Heights, VA 23834; tel 804-520-5400
1801 Iron Horse Drive, Suite B; Longmont, CO 80501; tel. 303-682-1200

MATERIAL:

REMARKS: ALL UNITS IN MM UNLESS OTHERWISE SPECIFIED

PROJECTION:

DESCRIPTION:
EXIT CONVEYOR 7'-0"
STD COLLATOR

SCALE: 1:10

SHEET: A3

DRAWING NUMBER: **2143-991-02**

REVISION: C

PAGE: 1 OF: 1

WEIGHT: 36793.41 g

© 2005 Drawing remains property of BluePrint Automation, Inc., All rights reserved

MFG INFO	
JOB:	067510-1-1
ASSY:	2403-477
QTY:	2
PART NO:	2403-477
COLOR:	Stainless Steel

ASSEMBLY NOTES:
1. ITEM 1 ASSEMBLES TO TOP OF RH COLLATOR (SEE 2143-976-01)
2. ITEMS 2, 5 AND 6 ASSEMBLE TO INCLINE CONVEYOR AND FRAME
3. ITEMS 3 AND 4 ASSEMBLE TO EXIT CONVEYOR AND FRAME
4. DRILL HOLES IN ITEM 4 TO MOUNT GUARD TO FRAME
5. SEE 2143-976-01 FOR REFERENCE

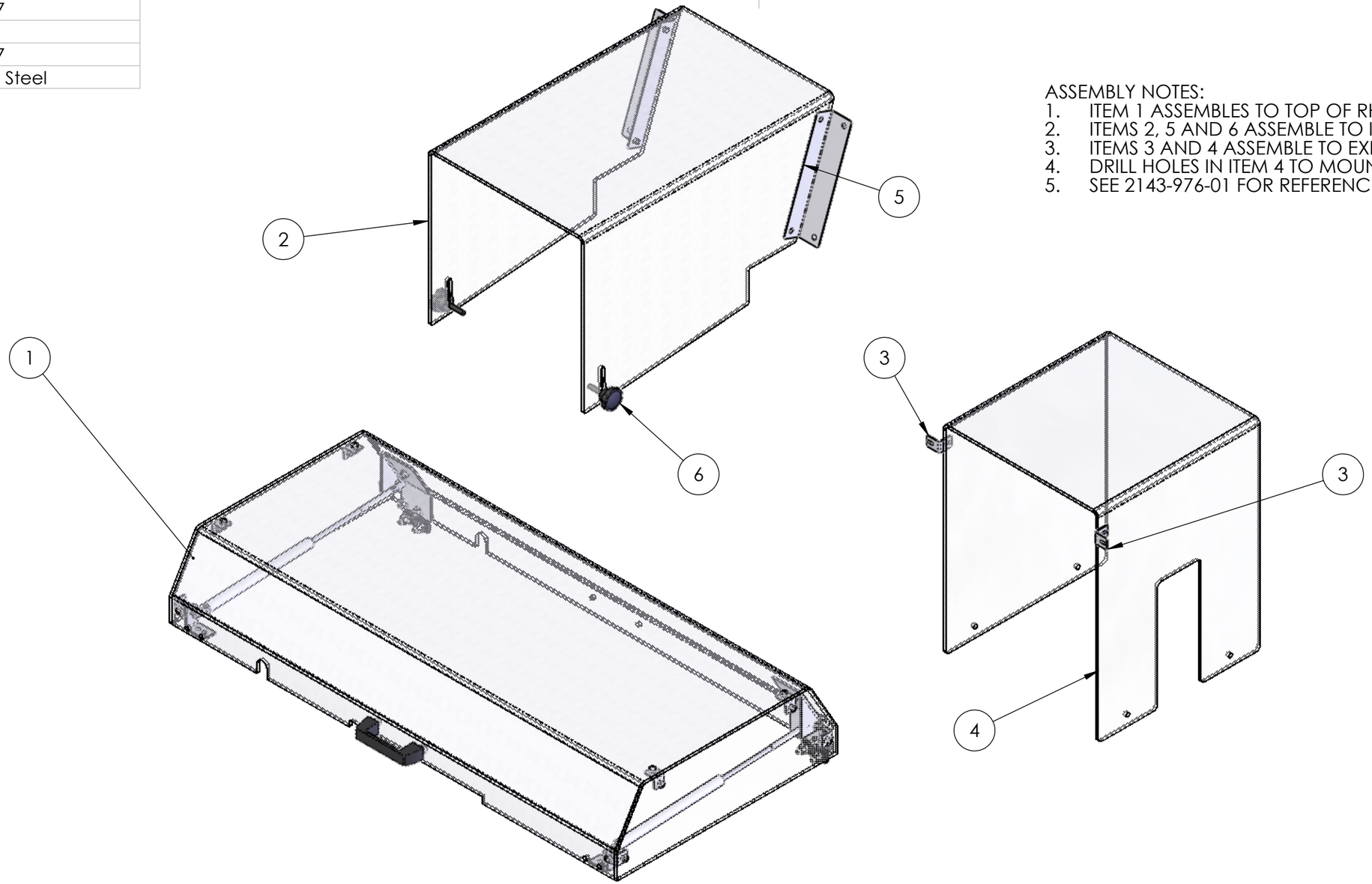

ITEM NO.	PART NO.	DESCRIPTION	Default/QTY.
6	102-497	vlm stock KNOB DK27	2
5	3107-907	INFEED GUARD BRACKET	2
4	3143-235	DISCHARGE GUARD	1
3	3143-495	JOINT BRACKET	2
2	3107-895	INFEED GUARD	1
1	2143-995	COLLATOR GUARDING, RH	1

REV.	VER.	DESCRIPTION	DATE	ENGINEER

REVISIONS

TOLERANCES UNLESS OTHERWISE NOTED
XX ±3mm
XX.X ±0.8mm
XX.XX ±0.3mm
ANGLES: ±0.5°
FINISHES: 125

	DATE:	NAME:
ENGINEER:	01/29/2018	Katie.Hildebrandt
CHECKED:		

BluePrint Automation
Oostzee 26 3446CH Woerden; tel. 0348-410999
16037 Innovation Drive, Colonial Heights, VA 23834; tel 804-520-5400
1801 Iron Horse Drive, Suite B; Longmont, CO 80501; tel. 303-682-1200

MATERIAL:

REMARKS: ALL UNITS IN MM UNLESS OTHERWISE SPECIFIED

PROJECTION:

DESCRIPTION:
KIT, GUARDS
RH COLLATOR

SCALE: 1:8

SHEET: A3

DRAWING NUMBER: **2403-477**

REVISION: A

PAGE: 1 OF: 2

WEIGHT: 21917.96 g

© 2013 Drawing remains property of BluePrint Automation, Inc., All rights reserved

MFG INFO	
JOB:	067510-1-1
ASSY:	2403-477
QTY:	2
PART NO:	2403-477
COLOR:	Stainless Steel

RIGHT HAND ASSEMBLY

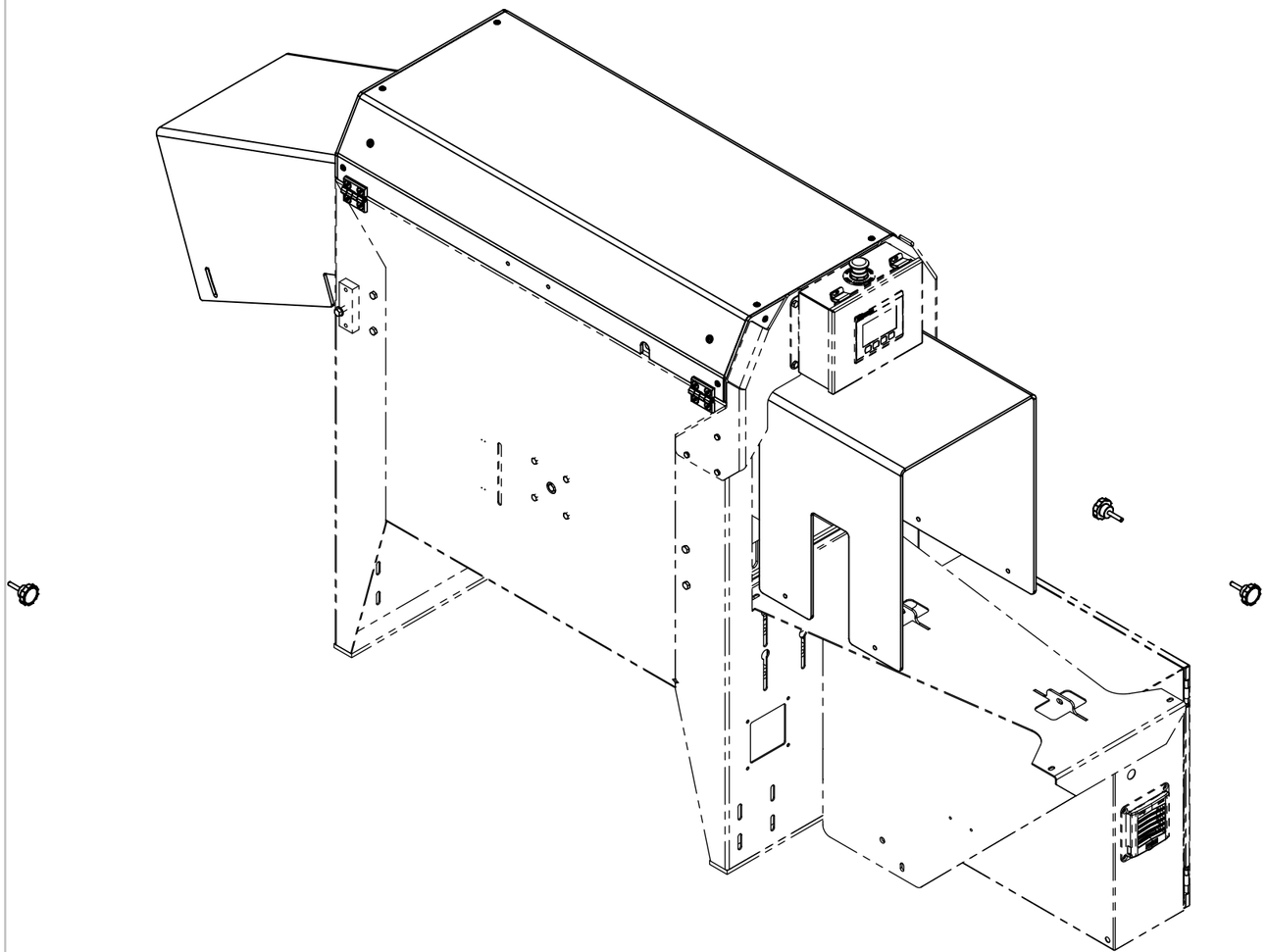

LEFT HAND ASSEMBLY

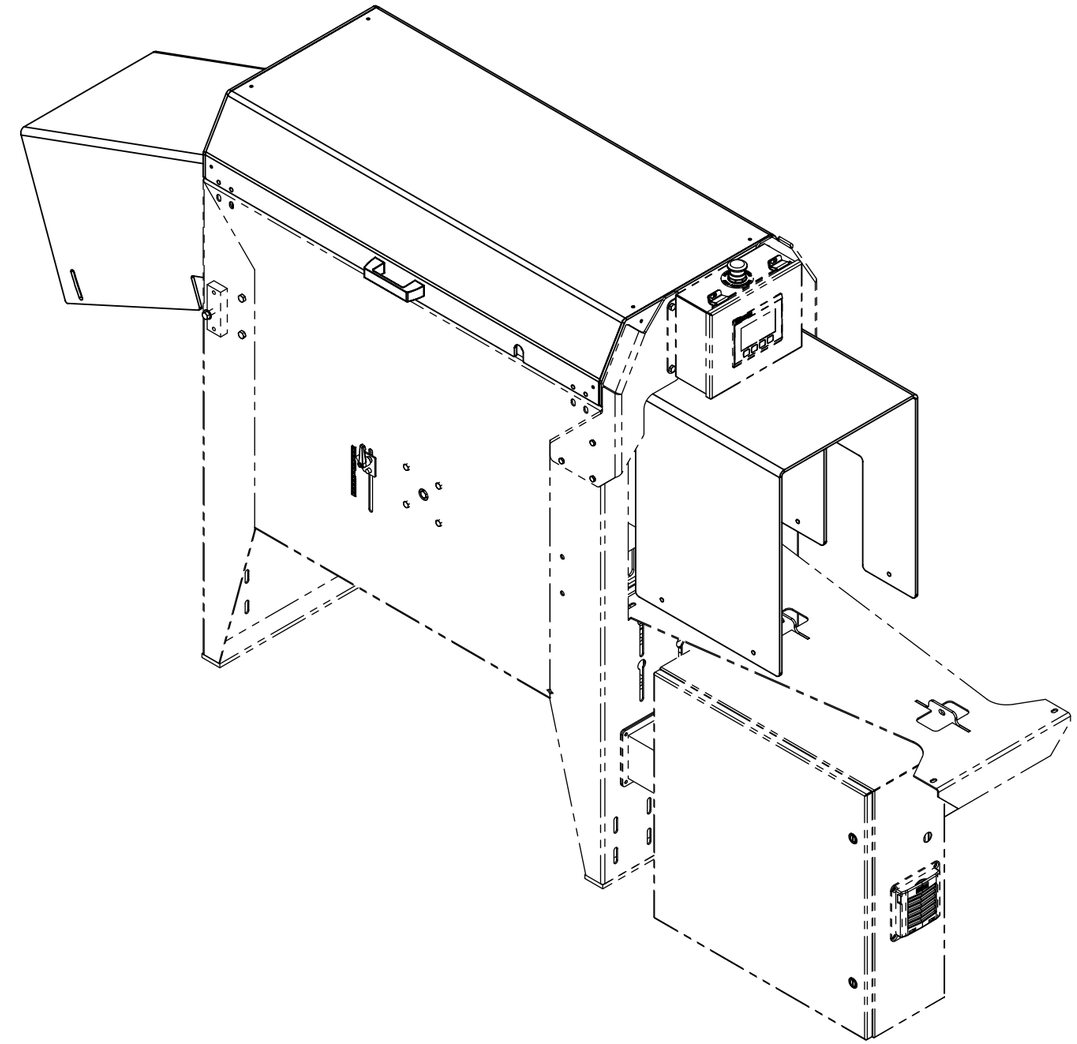

REV.	VER.	DESCRIPTION	DATE	ENGINEER

REVISIONS

TOLERANCES UNLESS OTHERWISE NOTED

XX	±3mm	ANGLES:	±0.5°
XX.X	±0.8mm		
XX.XX	±0.3mm	FINISHES:	125

	DATE:	NAME:
ENGINEER:	01/29/2018	Katie.Hildebrandt
CHECKED:		

BluePrint Automation

Oostzee 26 3446CH Woerden; tel. 0348-410999
16037 Innovation Drive, Colonial Heights, VA 23834; tel 804-520-5400
1801 Iron Horse Drive, Suite B; Longmont, CO 80501; tel. 303-682-1200

MATERIAL:

REMARKS: ALL UNITS IN MM UNLESS OTHERWISE SPECIFIED

PROJECTION:

DESCRIPTION:

KIT, GUARDS
RH COLLATOR

SCALE: 1:12

SHEET: A3

DRAWING NUMBER: **2403-477**

REVISION: A

PAGE: 2 OF: 2

WEIGHT: 21917.96 g

© 2013 Drawing remains property of BluePrint Automation, Inc., All rights reserved

MFG INFO	
JOB:	067510-1-1
ASSY:	2403-477
QTY:	2
PART NO:	2143-995
COLOR:	Stainless Steel

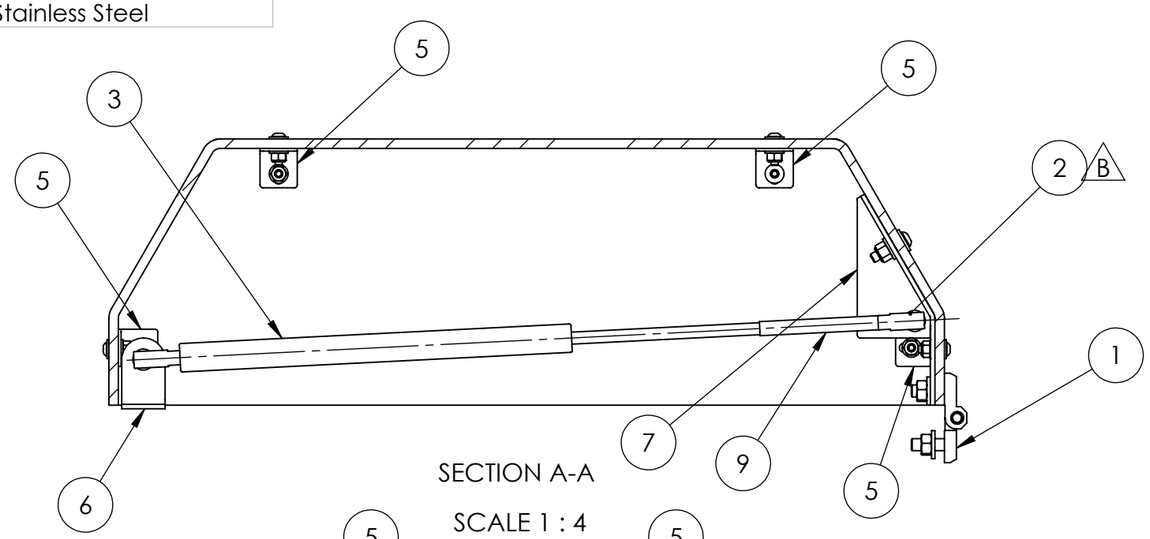

SECTION A-A

SCALE 1 : 4

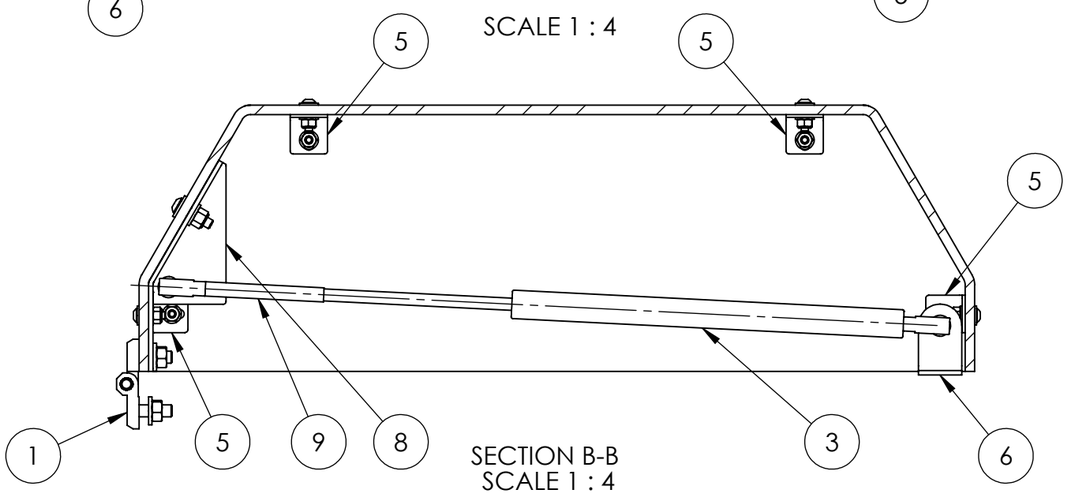

SECTION B-B
SCALE 1 : 4

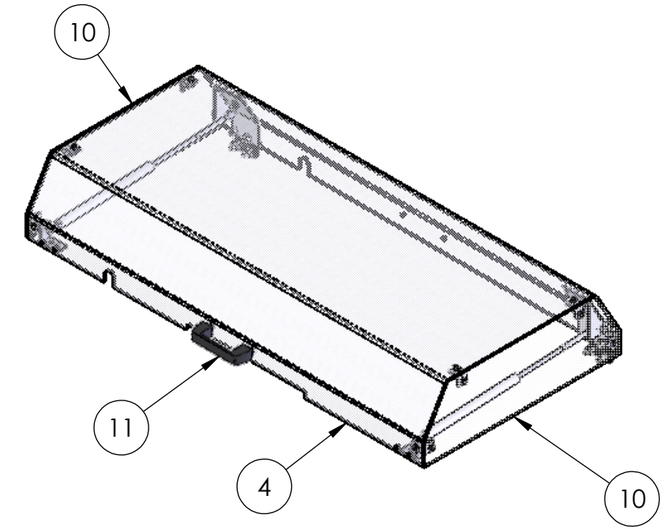

SCALE 1 : 12

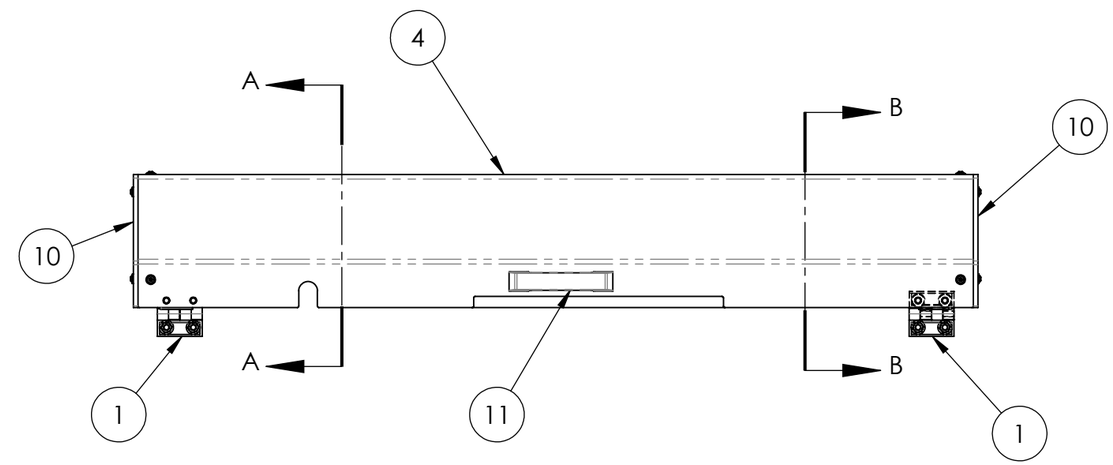

ITEM NO.	PART NO.	DESCRIPTION	Default/QTY.
11	101-099	HANDLE, TOOL WCH10"	1
10	3107-900	END COVER	2
9	3108-213	GAS SPRING EXTENSION	2
8	3107-897	RH TOP COVER SPRING PLATE	1
7	3107-896	LH TOP COVER SPRING PLATE	1
6	3107-894	SPRING MOUNT BRACKET	2
5	3107-893	JOINT BRACKET	8
4	3107-892	TOP COVER COLLATOR GUARD	1
3	107-270	ASSY, GAS SPRING, 9416K19	2
2	1300-839	BALL JOINT LINKAGE, M6 x 1, 6058K811	4
1	104-563	stock vlm HINGE- 095009	2

NOTE: RIGHT HAND CONFIGURATION SHOWN

REV.	VER.	DESCRIPTION	DATE	ENGINEER
B		REPLACED 106-208 WITH 1300-839	02/23/2017	Katie Hildebrandt

REVISIONS

TOLERANCES UNLESS OTHERWISE NOTED
.X---- ±0.1
.XX--- ±0.01
.XXX-- ±0.005
.XXXX- ±0.0005
ANGLES: ±0.5°
FINISHES: 125

	DATE:	NAME:
ENGINEER:	08/14/2014	Bill.Davis
CHECKED:		

BluePrint Automation
Oostzee 26 3446CH Woerden; tel. 0348-410999
16037 Innovation Drive, Colonial Heights, VA 23834; tel 804-520-5400
1801 Iron Horse Drive, Suite B; Longmont, CO 80501; tel. 303-682-1200

MATERIAL:

REMARKS: ALL UNITS IN MM UNLESS OTHERWISE SPECIFIED

PROJECTION:

DESCRIPTION:
COLLATOR GUARDING, RH
IMPERIAL

SCALE: 1:8

SHEET: A3

DRAWING NUMBER: **2143-995**

REVISION: B

PAGE: 1 OF: 1

WEIGHT: 10795.45 g

© 2013 Drawing remains property of BluePrint Automation, Inc., All rights reserved

MFG INFO	
JOB:	067510-1-1
ASSY:	2401-958
QTY:	2
PART NO:	2401-958
COLOR:	Stainless Steel
USER:	
DATE:	10/22/2020

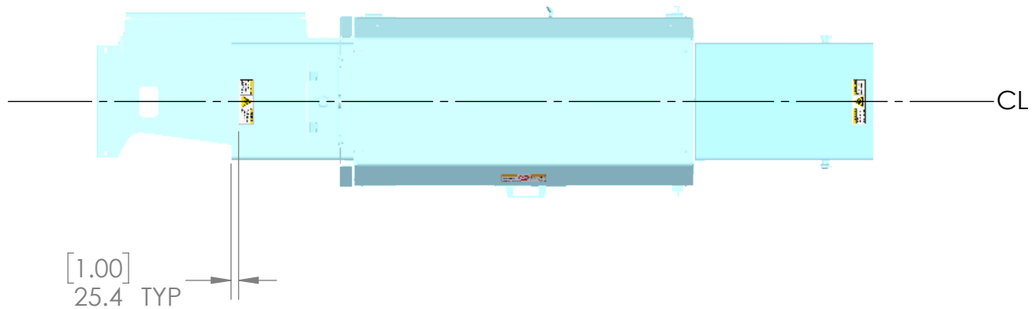

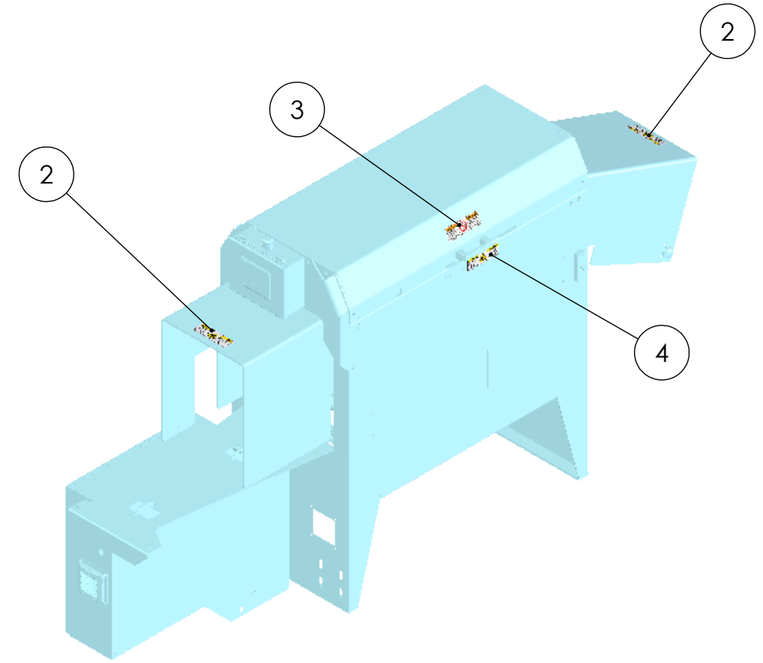

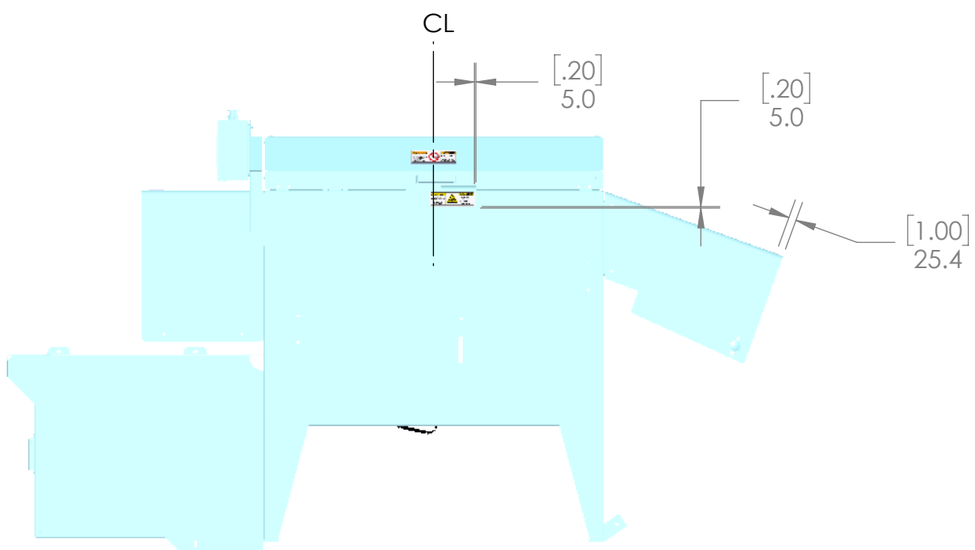

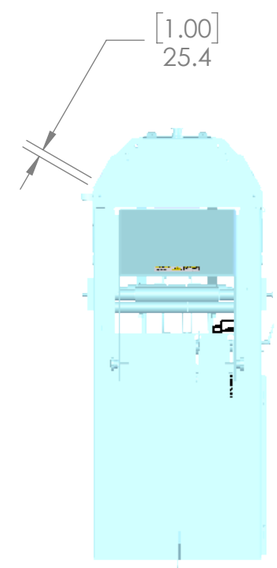

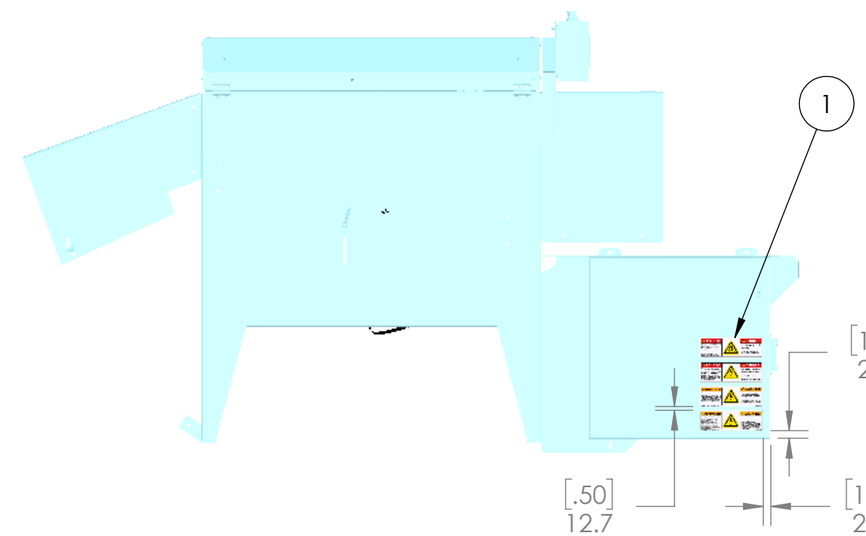

NOTE: APPLY LABLELS AFTER MECHANICAL ASSEMBLY, BEFORE TESTING

ITEM NO.	PART NO.	DESCRIPTION	Default/QTY.
4	1301-183	LABEL, CAUTION, LASER, ENG AND SP	1
3	1301-170	LABEL, WARNING AVOID INJURY, ENG AND SP	1
2	1301-167	LABEL, CAUTION, PINCH POINT, ENG AND SP	2
1	2401-626	DECALS HIGH VOLTAGE WARNING	1

REV.	VER.	DESCRIPTION	DATE	ENGINEER
B		CORRECTED LASER WARNING LABEL PART NO.	08/23/2017	Katie Hildebrandt

REVISIONS

GENERAL TOLERANCES, UNLESS OTHERWISE NOTED

DIMENSIONS ARE IN MILLIMETERS, [INCH DIMENSIONS] FOR REFERENCE ONLY

OVER & INCL.	UP TO	TOLERANCE
0.5	30	±0.1
30	315	±0.2
315	1000	±0.5
1000	2000	±0.8
2000	4000	±1.2

DEBURR & BREAK SHARP EDGES

ANGULAR TOLERANCES: ±1°

SURFACE FINISH: 3.2

DATE: 06/02/2017

ENGINEER: Christopher.Banks

SEED FILE:

©2017 All content remains the property of BluePrint Automation, Inc., All rights reserved

MATERIAL:

DESCRIPTION:
COLLATOR SAFETY LABELS
GENERIC

SHEET: B

DRAWING NUMBER:
2401-958

REVISION: B

WEIGHT: 211593.30 g SCALE: 1:20 PAGE: 1 OF: 1

bpa blueprint automation
Carrosserieweg 3, 3445 BC Woerden; tel. 0348-410 999
16037 Innovation Drive, Colonial Heights, VA 23834; tel 804-520-5400
4093 Specialty Place Ste A ; Longmont, CO 80504; tel. 303-682-1200

MFG INFO	
JOB:	067510-1-1
ASSY:	2401-958
QTY:	2
PART NO:	2401-626
COLOR:	Stainless Steel
USER:	
DATE:	10/22/2020

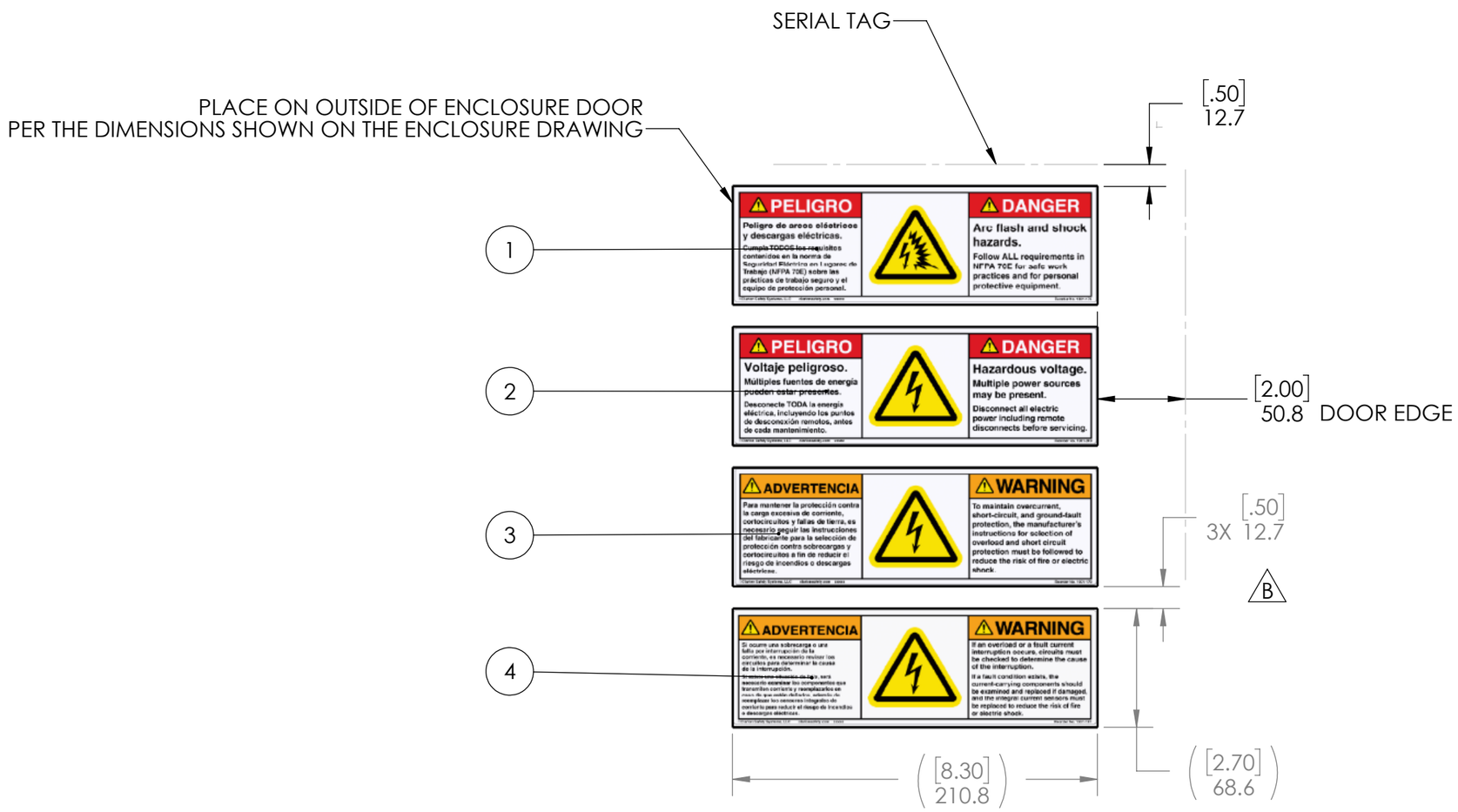

ITEM NO.	PART NO.	DESCRIPTION	QTY.
4	1301-181	LABEL, WARNING, CURRENT INTRPT, ENG/SP	1
3	1301-178	LABEL, WARNING, SHORT PROTECTION, ENG/SP	1
2	1301-203	LABEL, DANGER, HAZ VOLT, ENG AND SP	1
1	1301-175	LABEL, DANGER, ARC FLASH, ENG AND SP	1

REV.	VER.	DESCRIPTION	DATE	ENGINEER
B		UPDATE PER STANDARD 1.481, 12.7 WAS 25.4	11/03/2017	Michael Peters

REVISIONS

TOLERANCES UNLESS OTHERWISE NOTED
XX ±3mm
XX.X ±0.8mm
XX.XX ±0.3mm
ANGLES: ±0.5°
FINISHES: 125

	DATE:	NAME:
ENGINEER:	04/25/2017	Matt.Hassler
SEED FILE:		

BluePrint Automation
Oostzee 26 3446CH Woerden; tel. 0348-410999
16037 Innovation Drive, Colonial Heights, VA 23834; tel 804-520-5400
1801 Iron Horse Drive, Suite B; Longmont, CO 80501; tel. 303-682-1200

MATERIAL:

REMARKS: ALL UNITS IN MM UNLESS OTHERWISE SPECIFIED

PROJECTION:

DESCRIPTION: DECALS HIGH VOLTAGE WARNING

SCALE: 1:3

SHEET: A3

DRAWING NUMBER: **2401-626**

REVISION: B

PAGE: 1 OF: 1

WEIGHT: 57.83 g

© 2013 Drawing remains property of BluePrint Automation, Inc., All rights reserved